Issue:	Drawn By:	Checked By:	CRF No.:	Date:	Description:
a	SJ	KB	3609	21/10/25	First Issue
b					
c					
d					

IA3KE
KammEdge.
Instructions

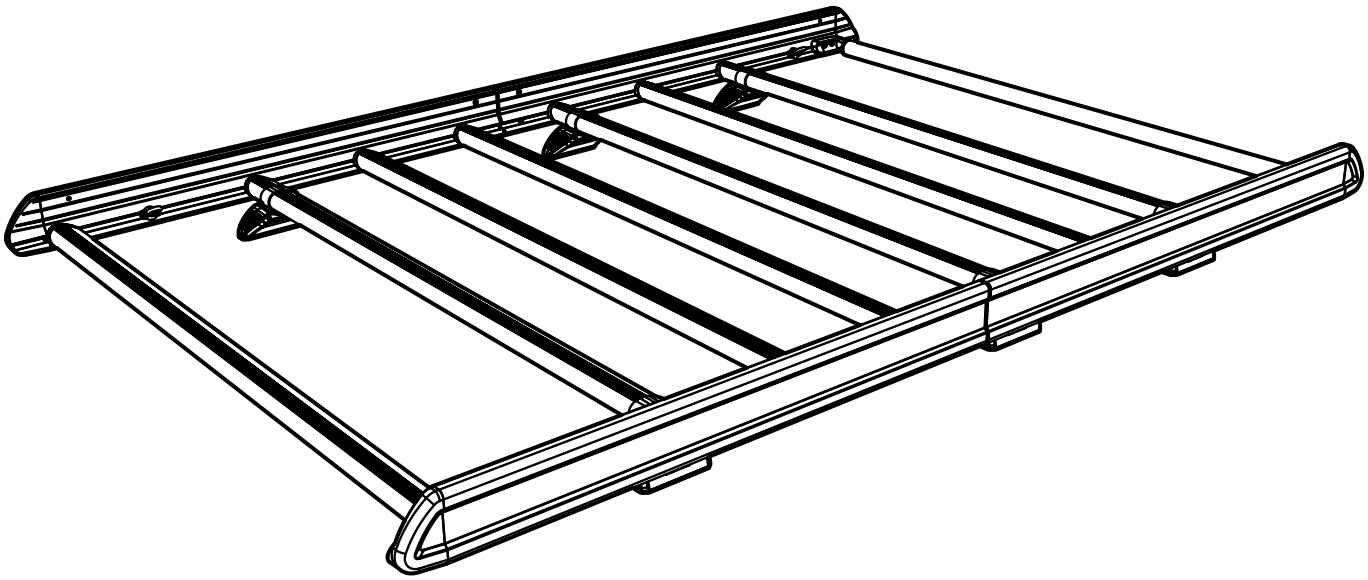

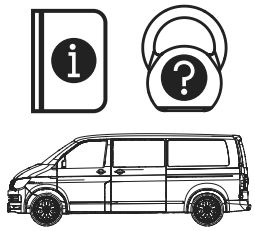

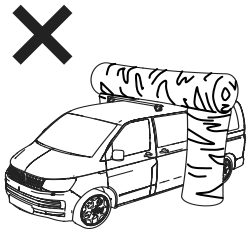

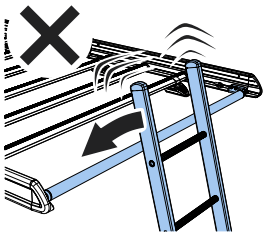

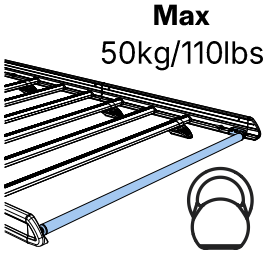

Max
50kg/110lbs

KammEdge

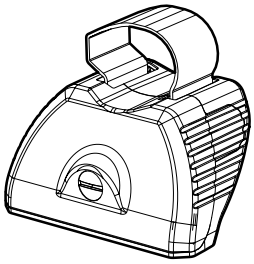

SA397U x 3

☐

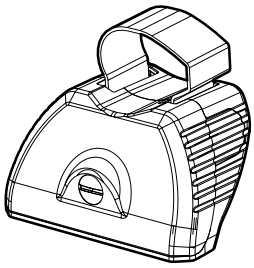

SA398U x 3

☐

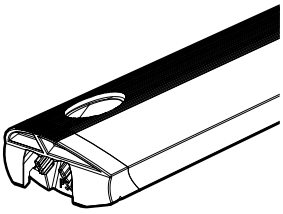

SA431/SA469 x 7

☐

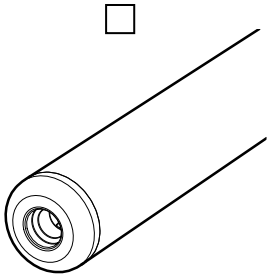

SA439 x 1

☐

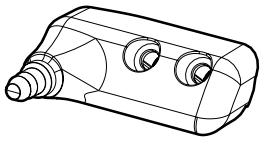

PS519 x 1

☐

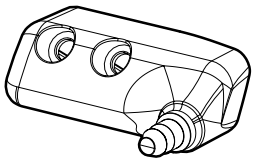

PS520 x 1

☐

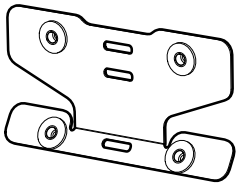

SA610 x 2

☐

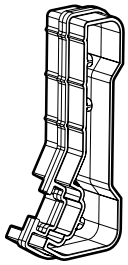

PS635 x 2

☐

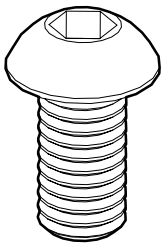

FS323
(M6 x 16) x 8

☐

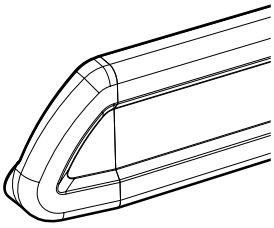

LSF (L) x 2

☐

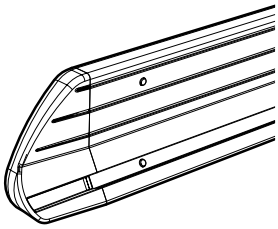

LSF (R) x 2

☐

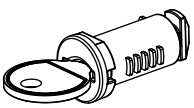

C04 x 6
optional upgrade

Fitting Kit

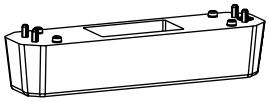

PS180 x 6 ☐

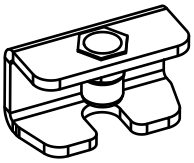

SA068 x 6 ☐

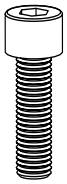

FS059
(M8 x 25) x 18 ☐

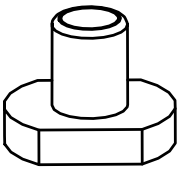

FN085 x 18 ☐

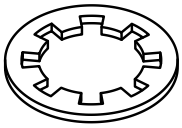

FW009 (M8) x 6 ☐

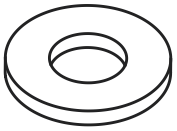

FW002 (M8) x 6 ☐

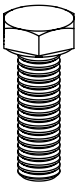

FS067
(M8 x 20) x 6 ☐

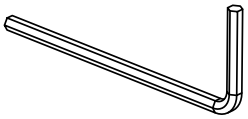

FT05 x 1 ☐



FT01 x 1 ☐

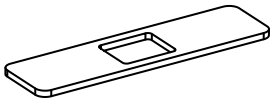

PS047 x 6 ☐

1.

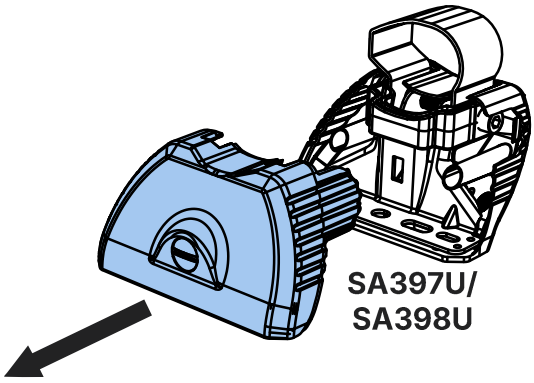
SA397U/
SA398U

2.

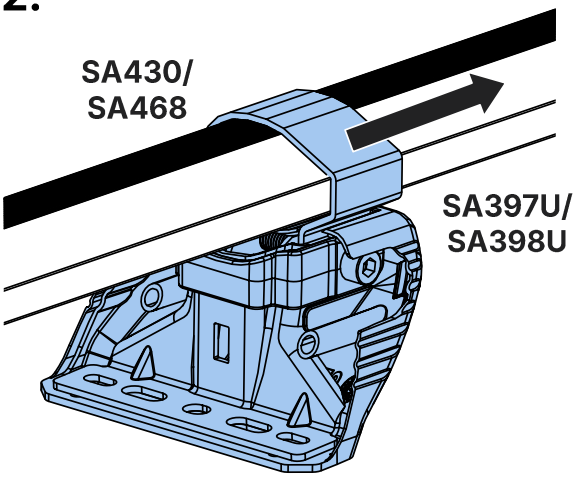
SA430/
SA468
SA397U/
SA398U

3.

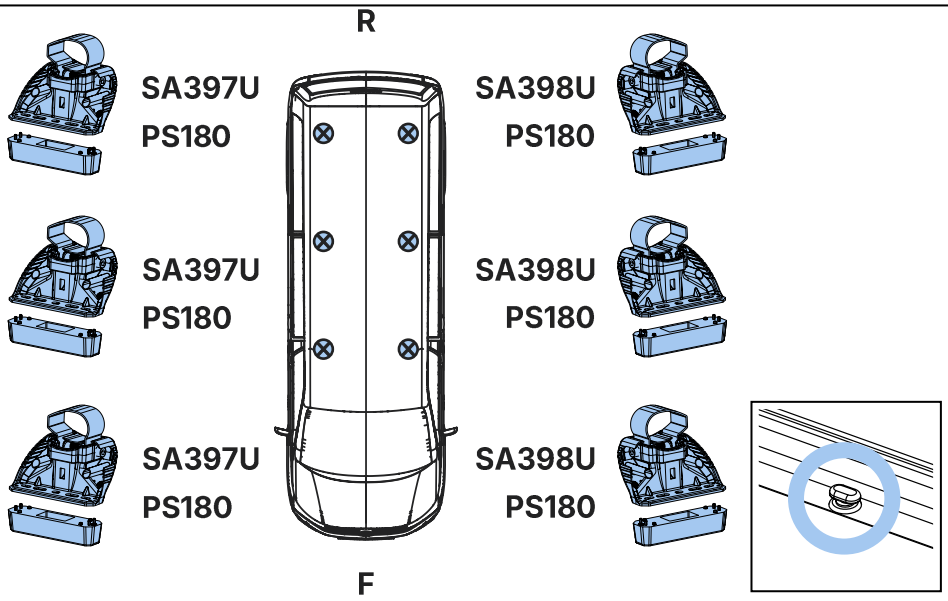
R
SA397U
PS180
SA398U
PS180
SA397U
PS180
SA398U
PS180
SA397U
PS180
SA398U
PS180
F

4.

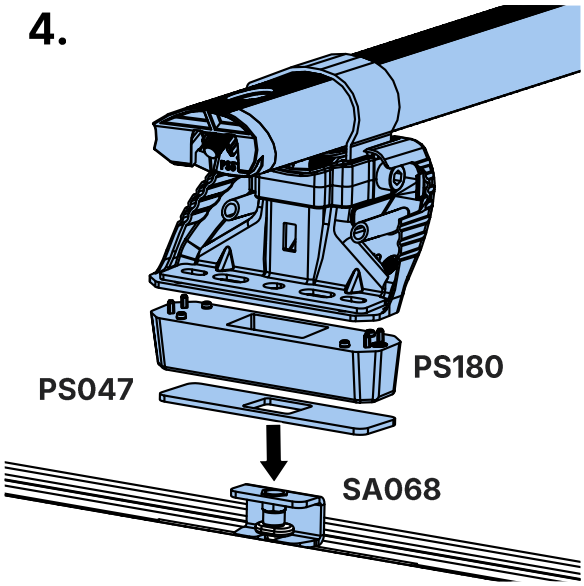
PS047
PS180
SA068

5.

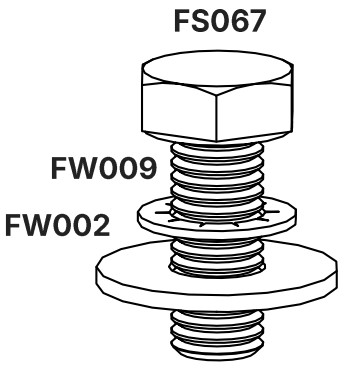
FS067
FW009
FW002

6.

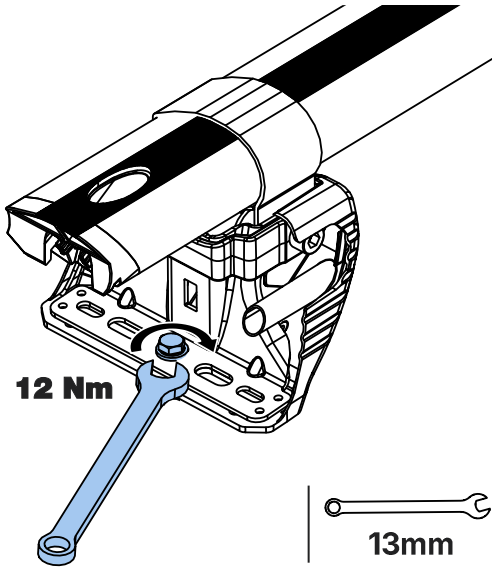

7.

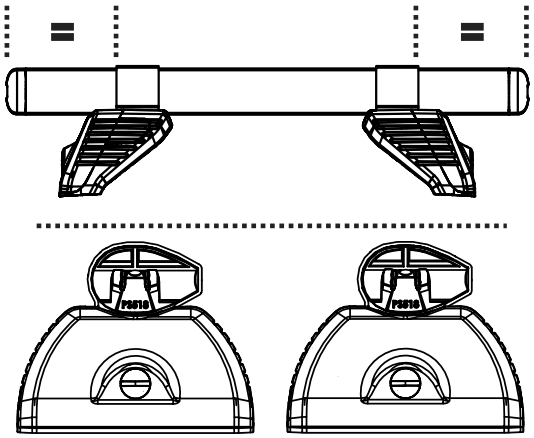

8.

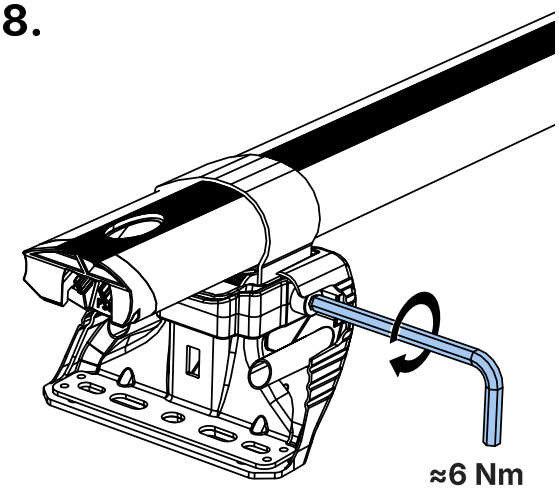

9.

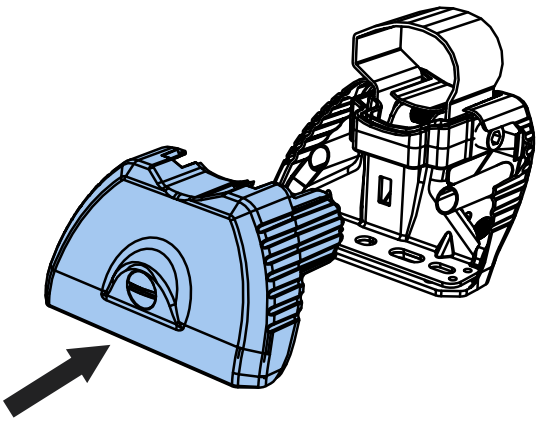

10.

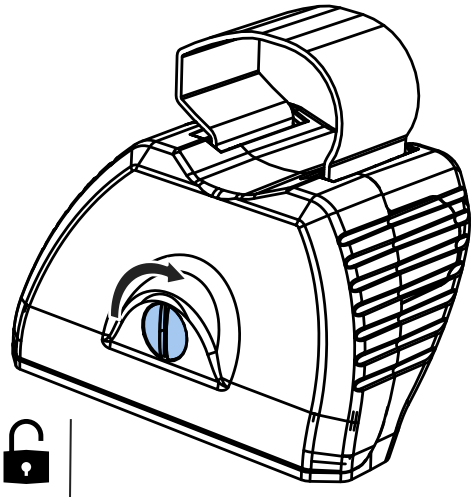

11.

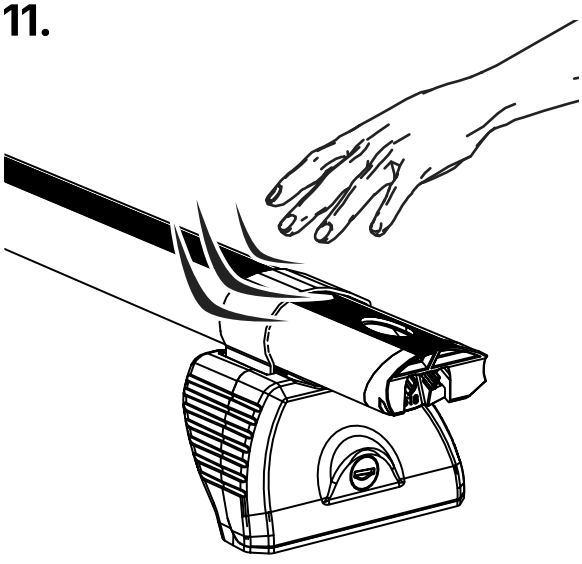

L545/LB545- Jumper/Relay/Boxer/Ducato 2006-, Movano 2020-, L1-H1 (Twin)

Max Load = 150kg/330lbs

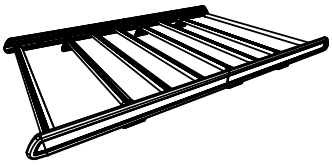

L545/LB545 = 27kg/60lbs

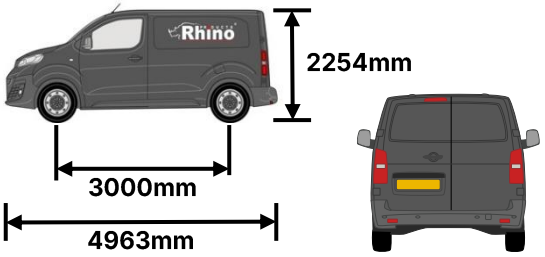

FN085 X4

FN085 X5

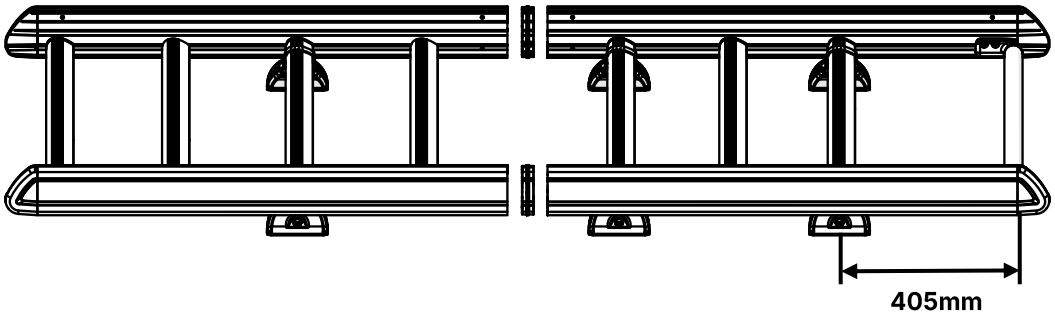

L545/LB545- Jumper/Relay/Boxer/Ducato 2006-, Movano 2020-, L2-H1 (Twin)

Max Load = 150kg/330lbs

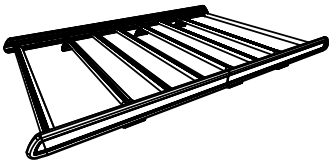

L545/LB545 = 27kg/60lbs

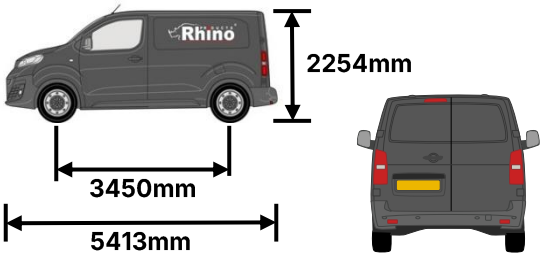

FN085 X4

FN085 X5

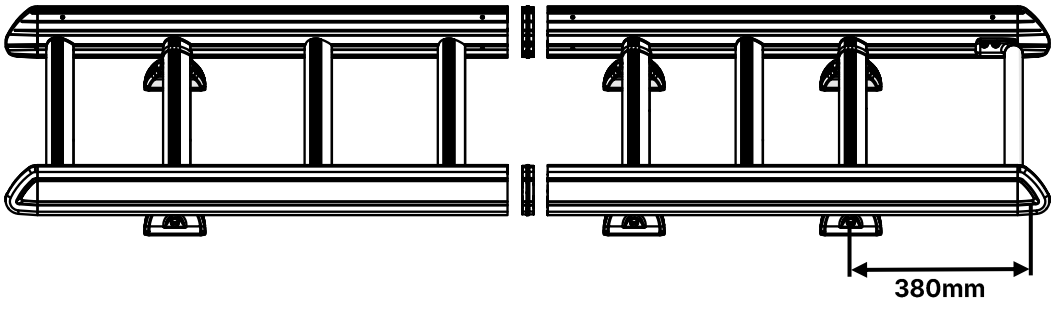

L545/LB545- Jumper/Relay/Boxer/Ducato 2006-, Movano 2020-, L2-H2 (Twin)

Max Load = 150kg/330lbs

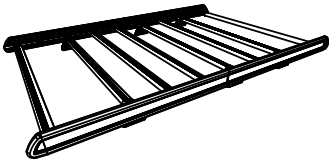

L545/LB545 = 27kg/60lbs

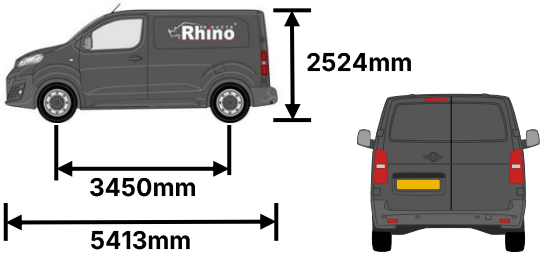

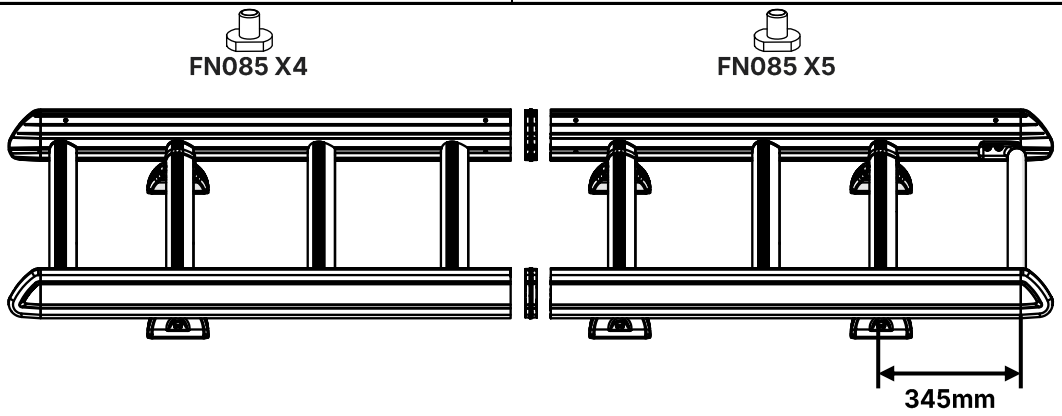

12.

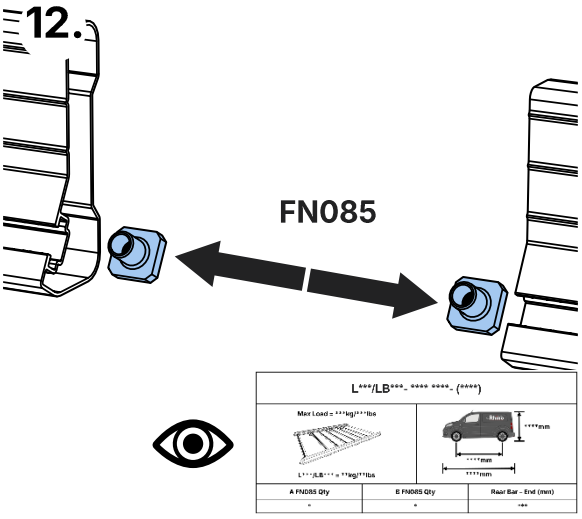

13.

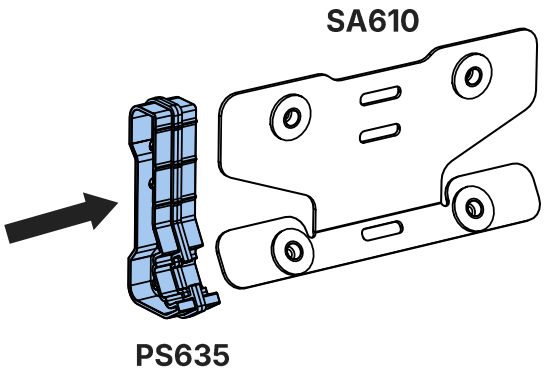

14.

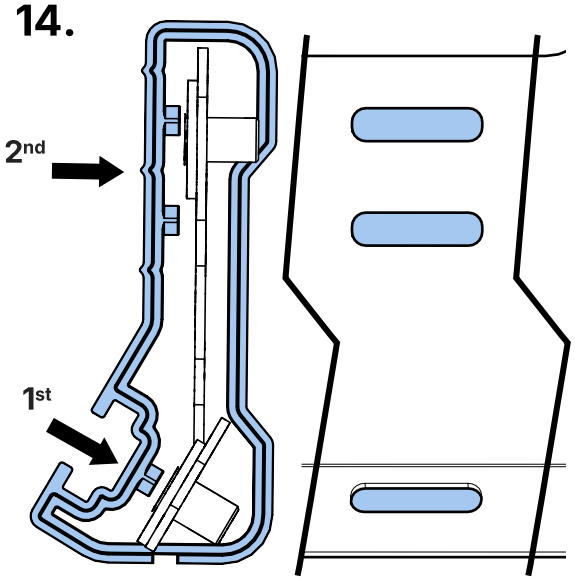

15.

CLICK!

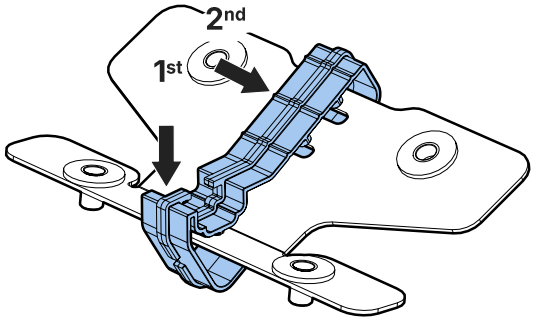

16.

x2

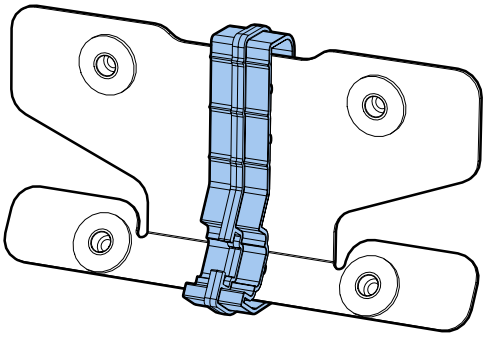

17.

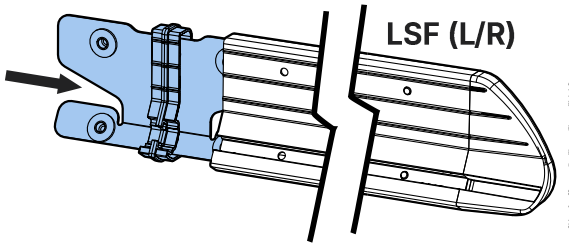

18.

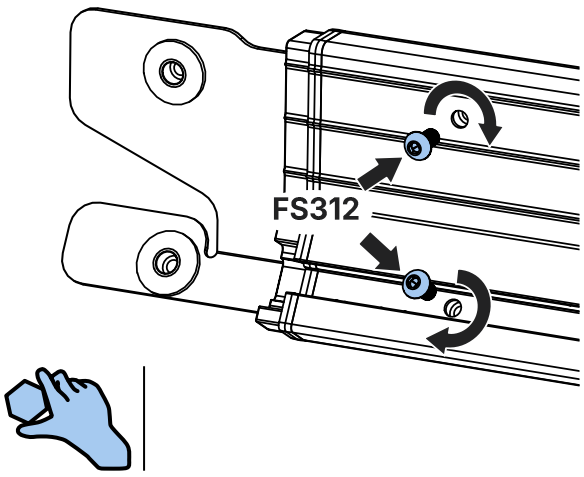

19.

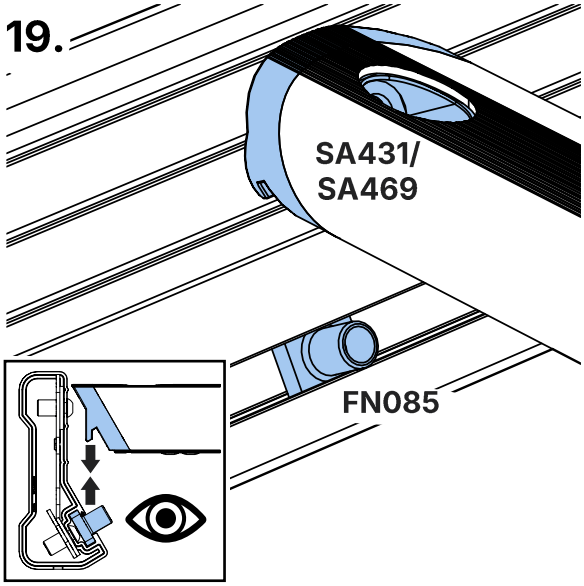

20.

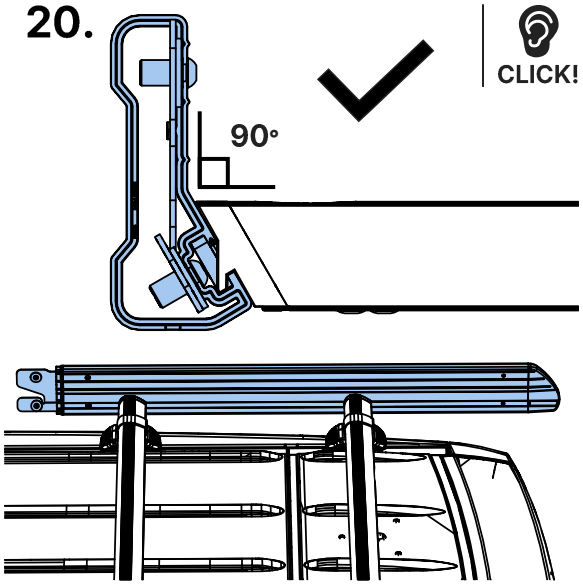

21.

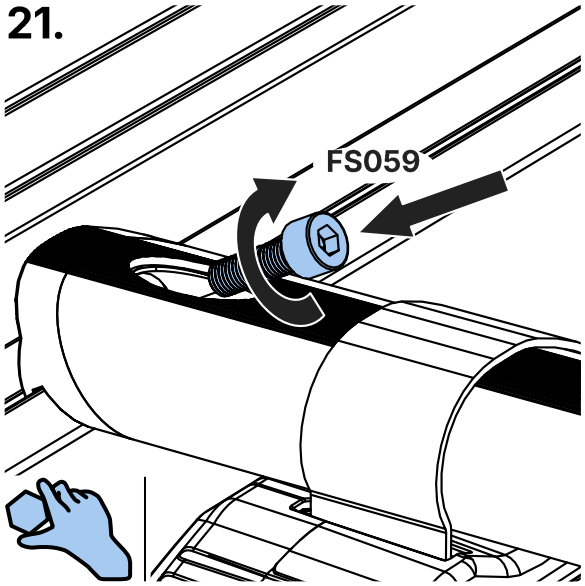

22.

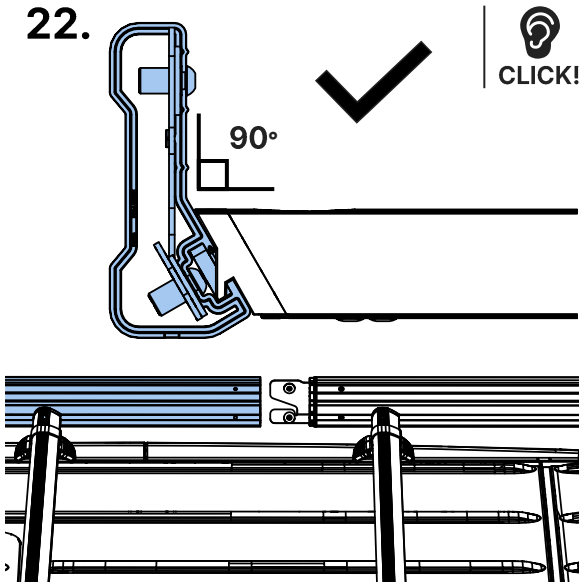

23.

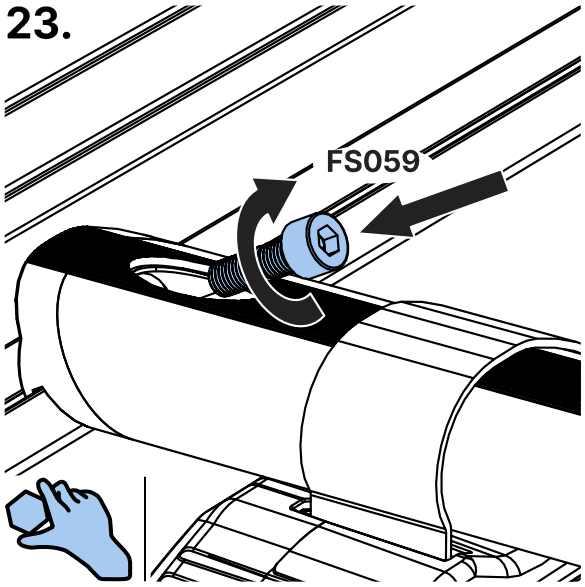

24.

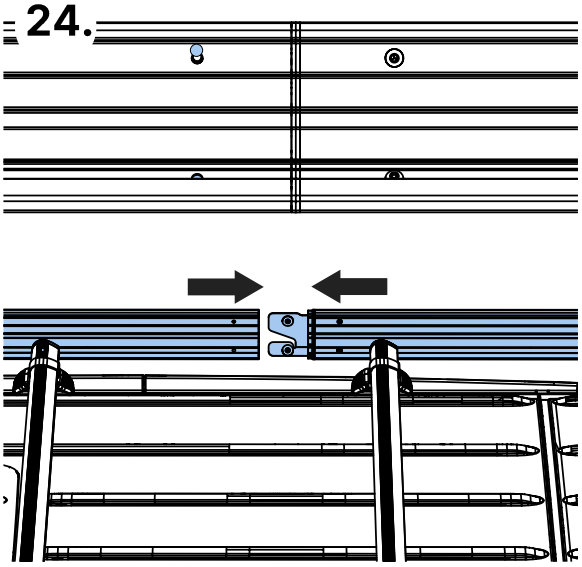

25.

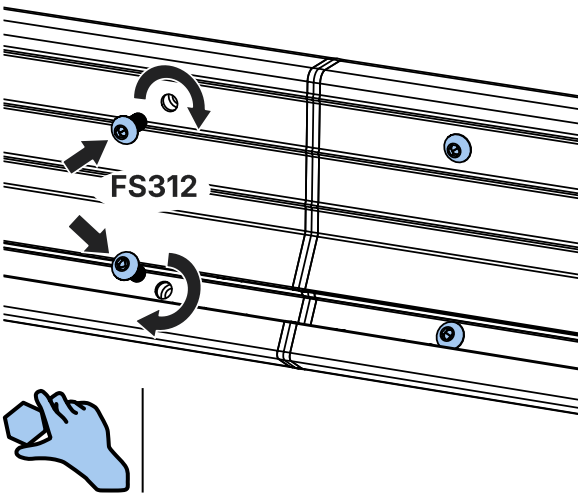

26.

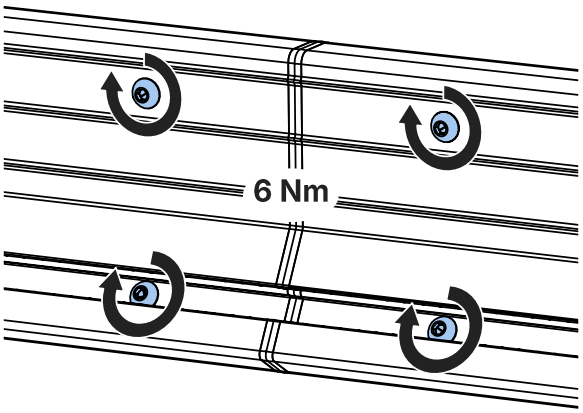



27.



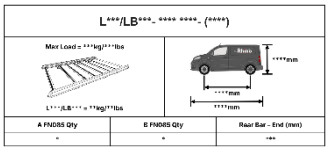

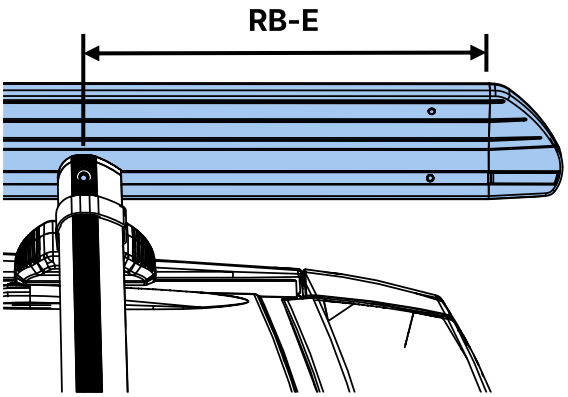

28.

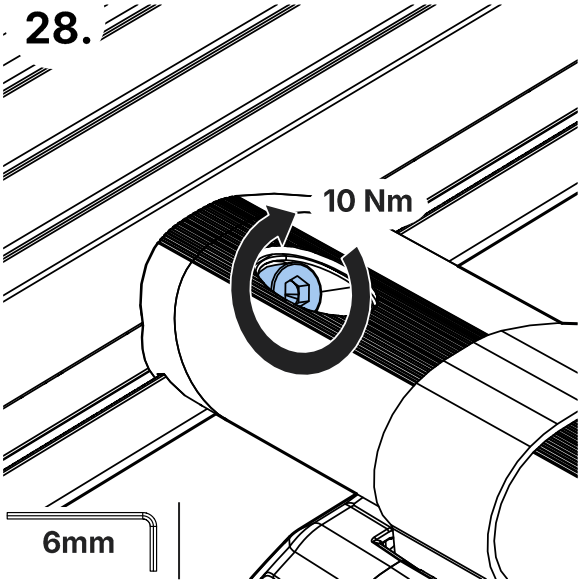

29.



17-28.



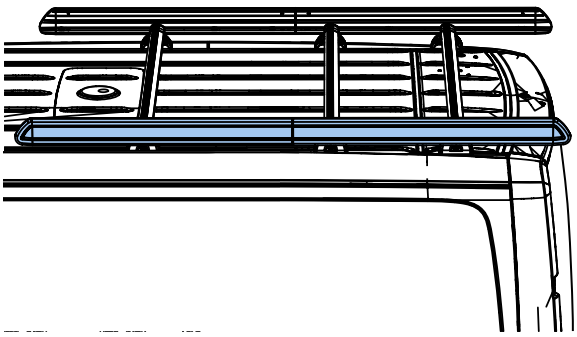

30.

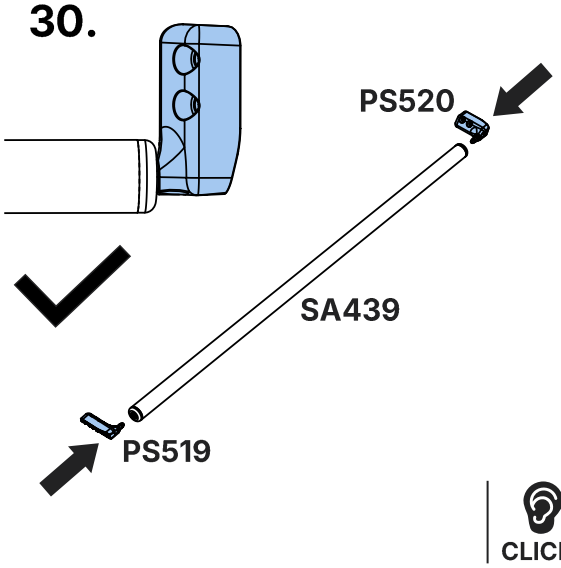

31.

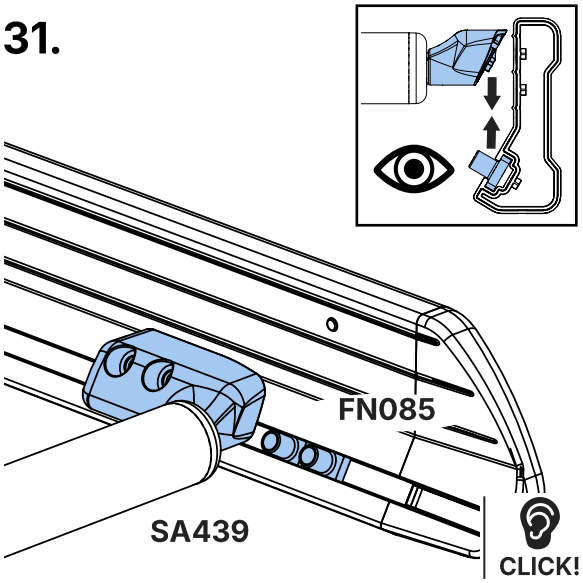

32.

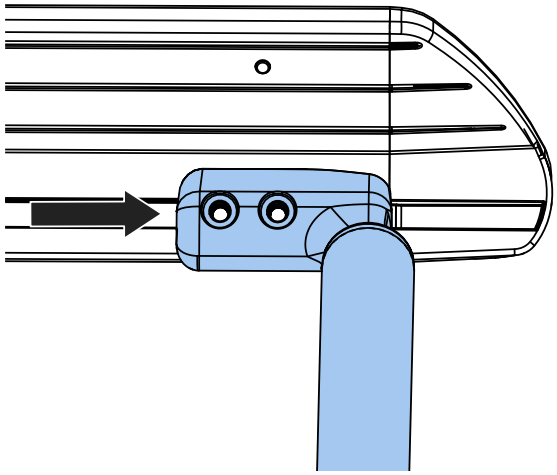

33.

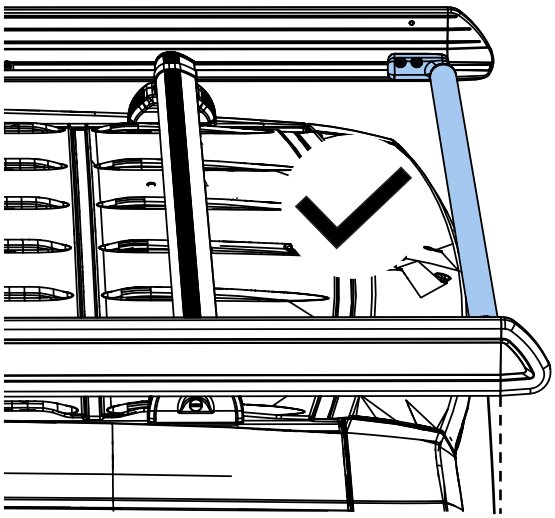

34.

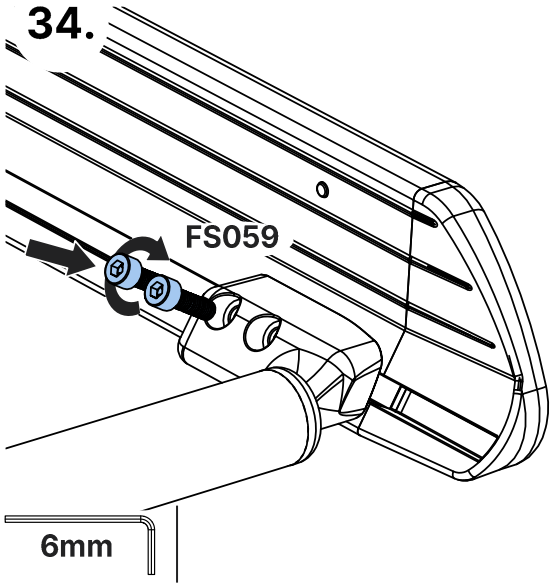

35.

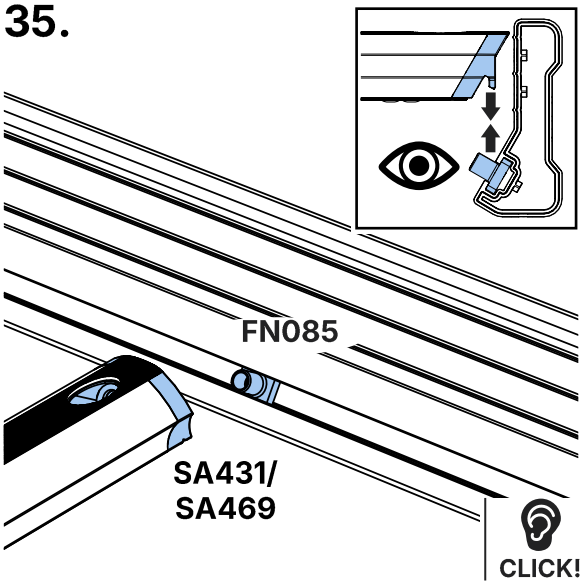

36.

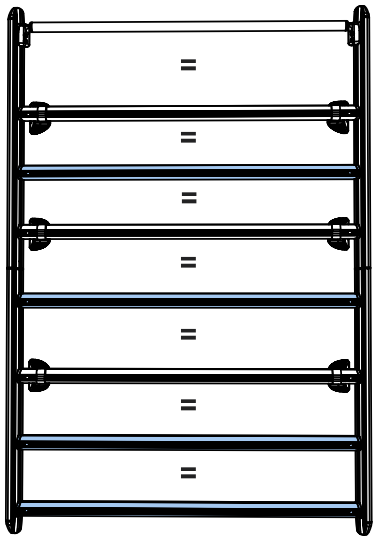

37.

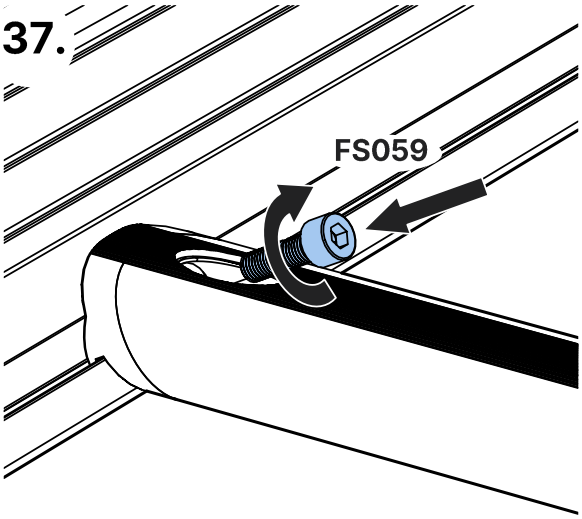

38.

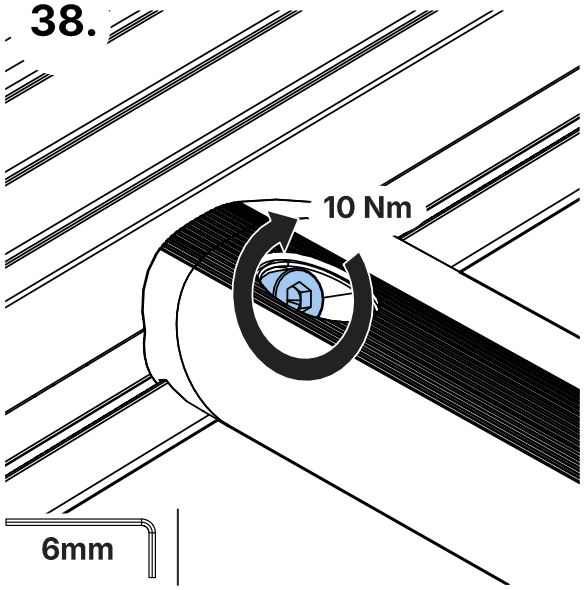

39.

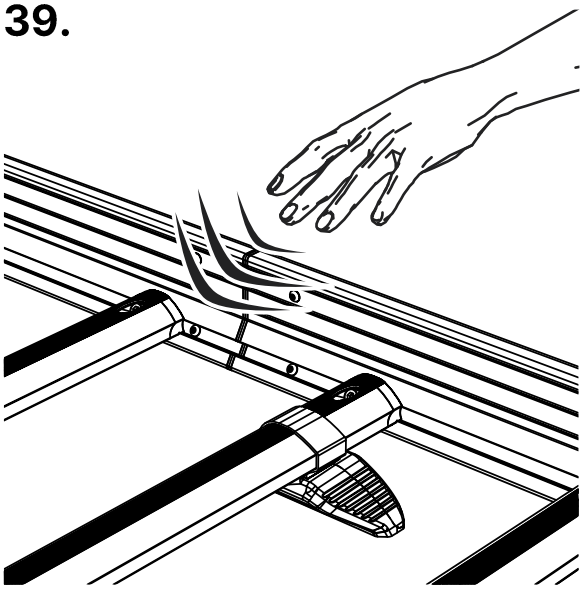

40.

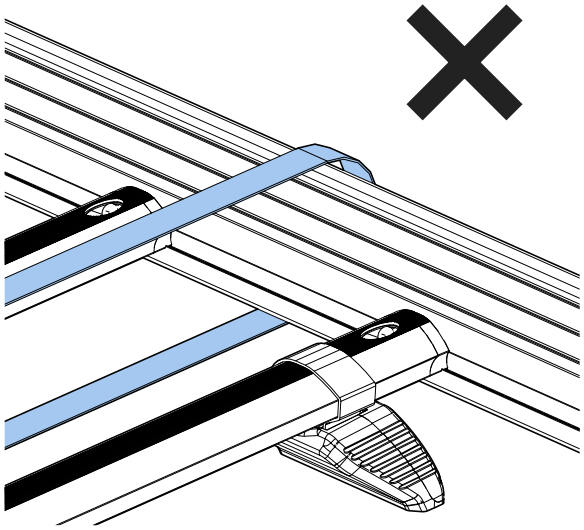

41.

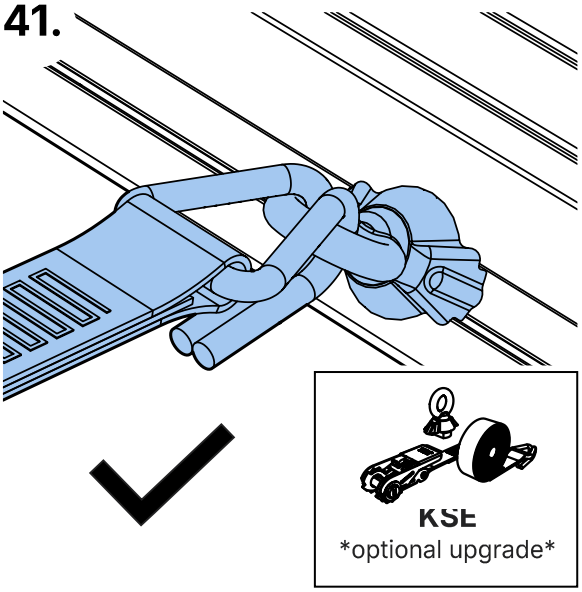

Issue:	Drawn By:	Checked By:	CRF No.:	Date:	Description:
a	SJ	KB	3609	21/10/25	First Issue
b					
c					
d					

IA74KE
KammEdge.
Instructions

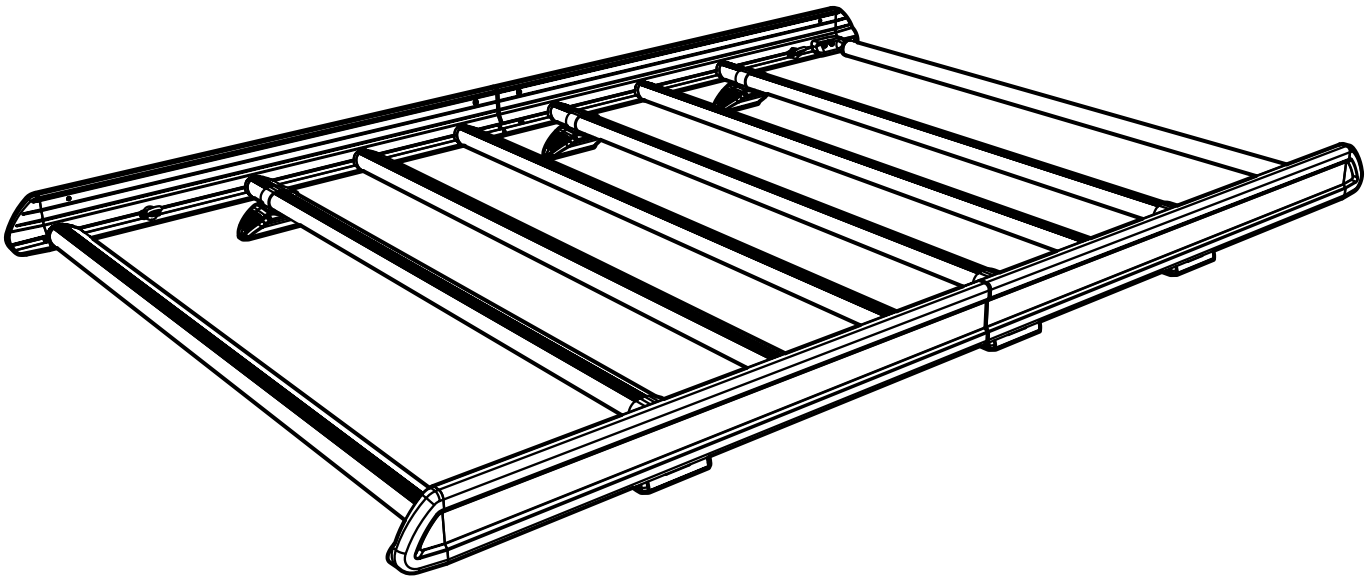

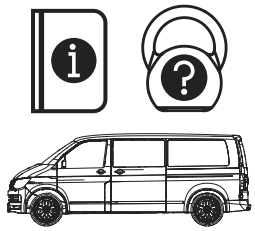

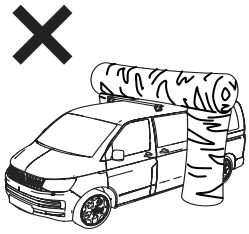

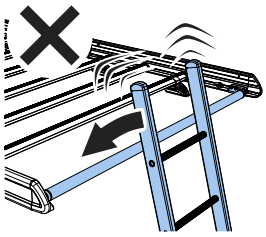



KammEdge

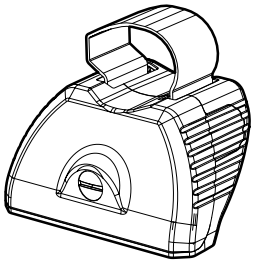

SA397U x 4

☐

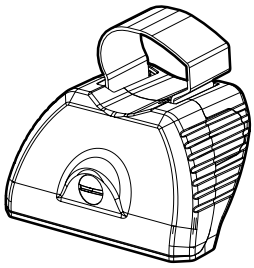

SA398U x 4

☐

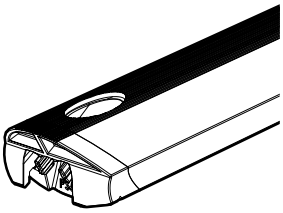

SA431/SA469 x 9

☐

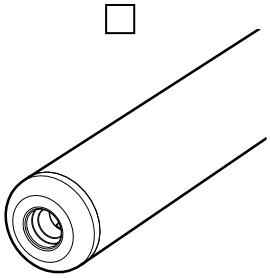

SA439 x 1

☐

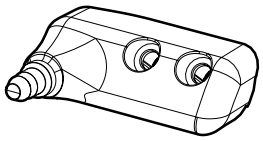

PS519 x 1

☐

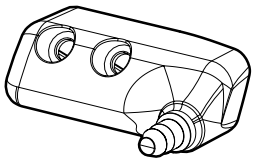

PS520 x 1

☐

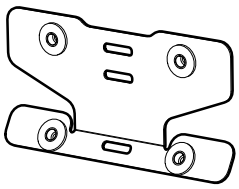

SA610 x 4

☐

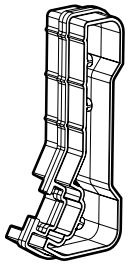

PS635 x 4

☐

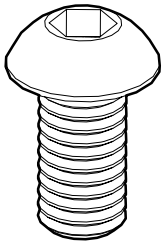

FS323
(M6 x 16) x 16

☐

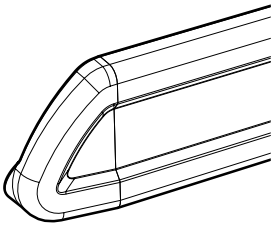

LSF (L) x 2

☐

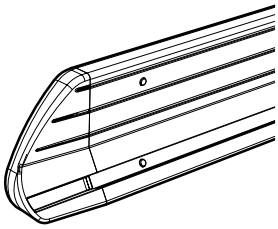

LSF (R) x 2

☐

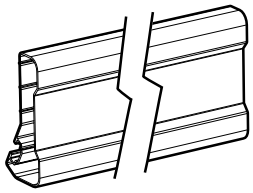

LSF (M) x 2

☐

Fitting Kit

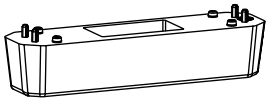

PS180 x 8

☐

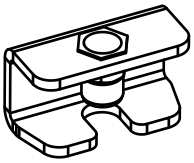

SA068 x 8

☐

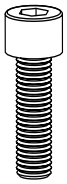

FS059
(M8 x 25) x 22

☐

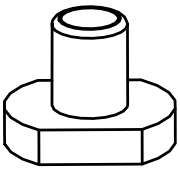

FN085 x 22

☐

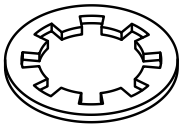

FW009 (M8) x 8

☐

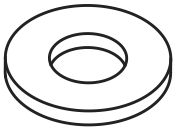

FW002 (M8) x 8

☐

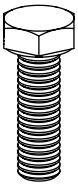

FS067
(M8 x 20) x 8

☐

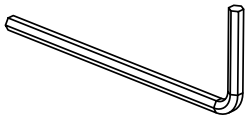

FT05 x 1

☐



FT01 x 1

☐

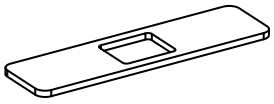

PS047 x 8

☐

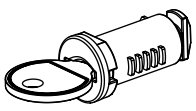

C04 x 8
optional upgrade

1.

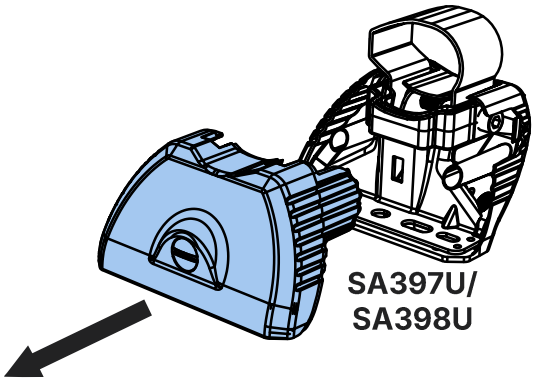
SA397U/
SA398U

2.

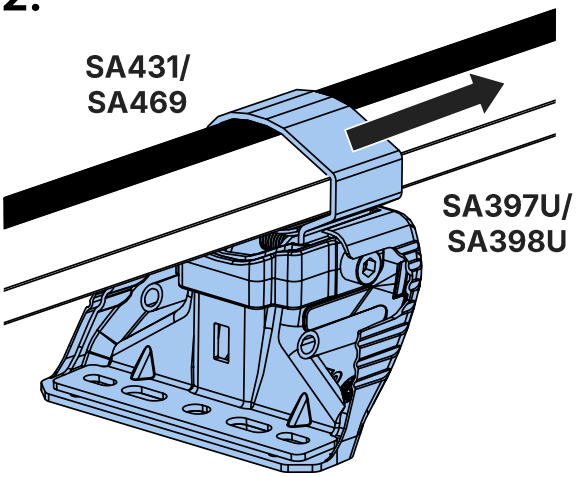
SA431/
SA469
SA397U/
SA398U

3.

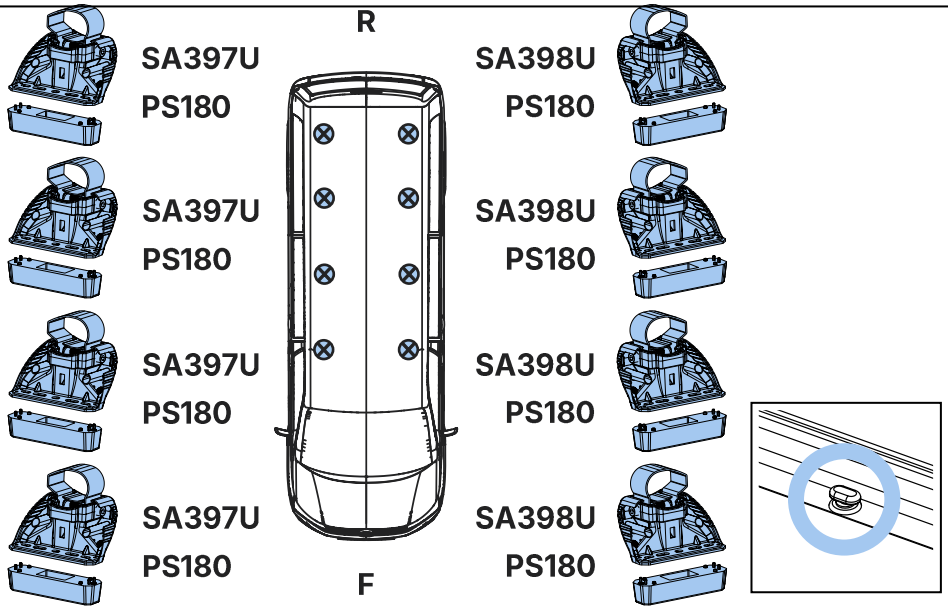
R
SA397U
PS180
SA397U
PS180
SA397U
PS180
SA397U
PS180
SA398U
PS180
SA398U
PS180
SA398U
PS180
SA398U
PS180
F

4.

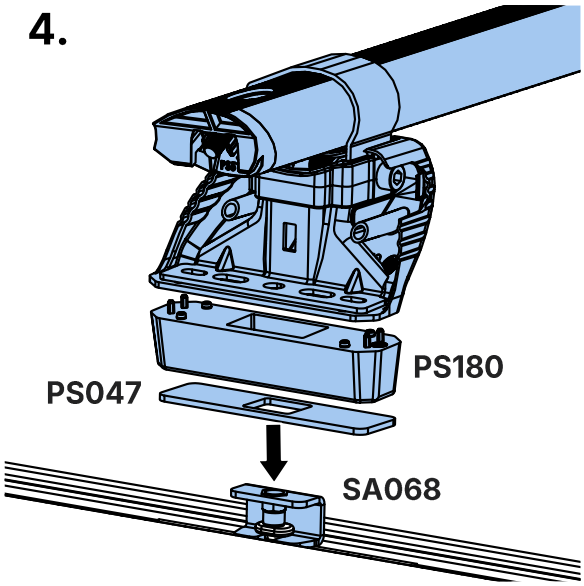
PS180
PS047
SA068

5.

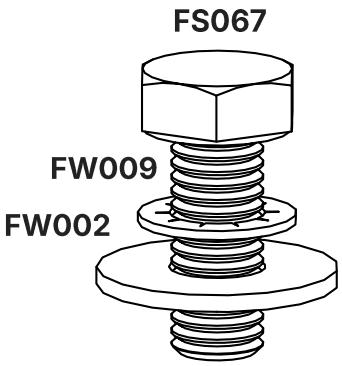
FS067
FW009
FW002

6.

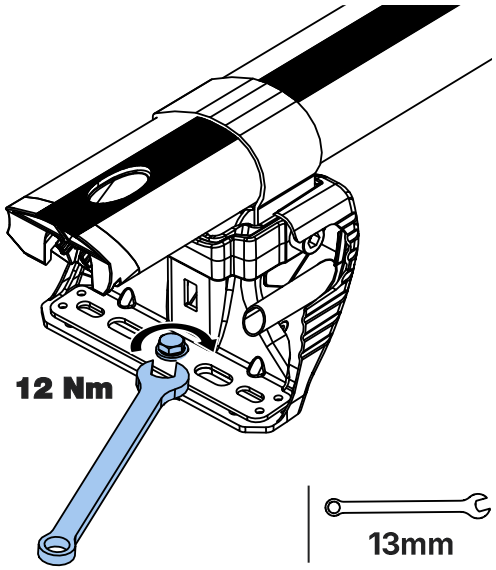

7.

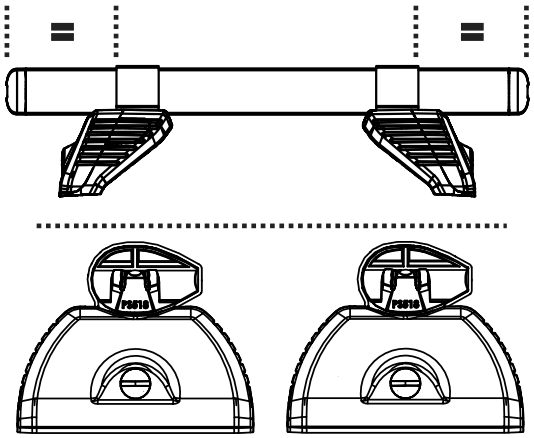

8.

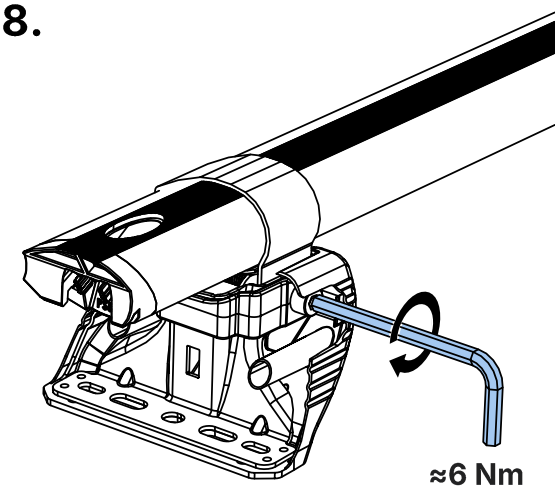

9.

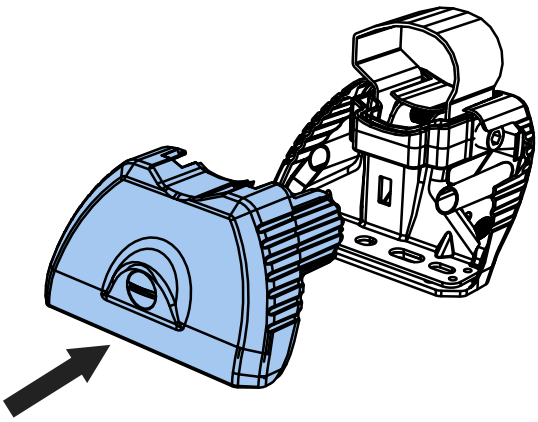

10.

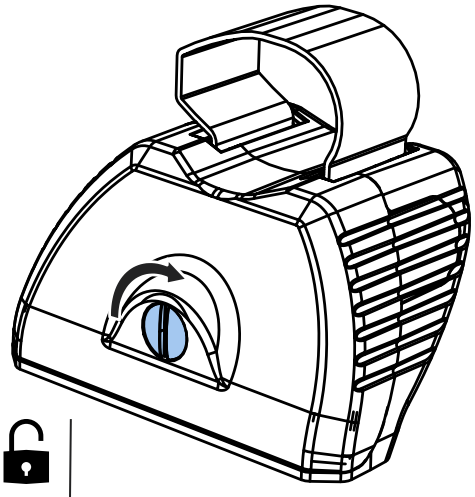

11.

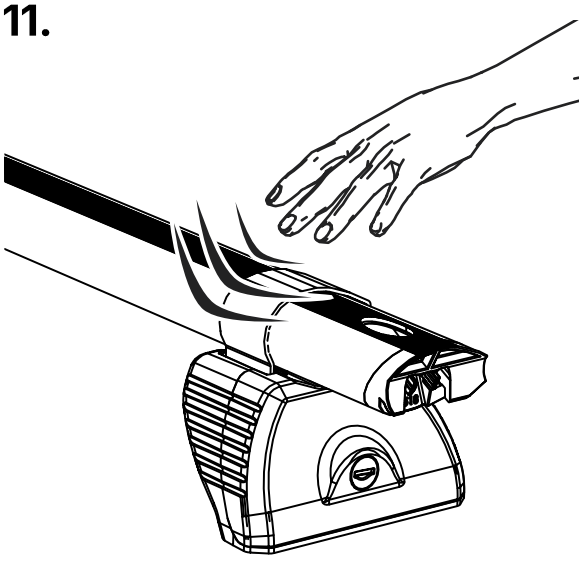

L587/LB587- Jumper/Relay/Boxer/Ducato 2006-, Movano 2020-, L4-H2 (Twin)

Max Load = 150kg/330lbs

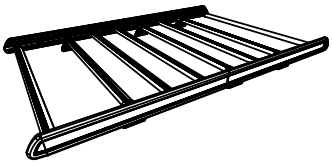

L587/LB587 = 35kg/76lbs

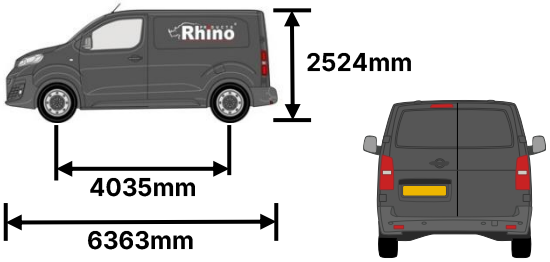

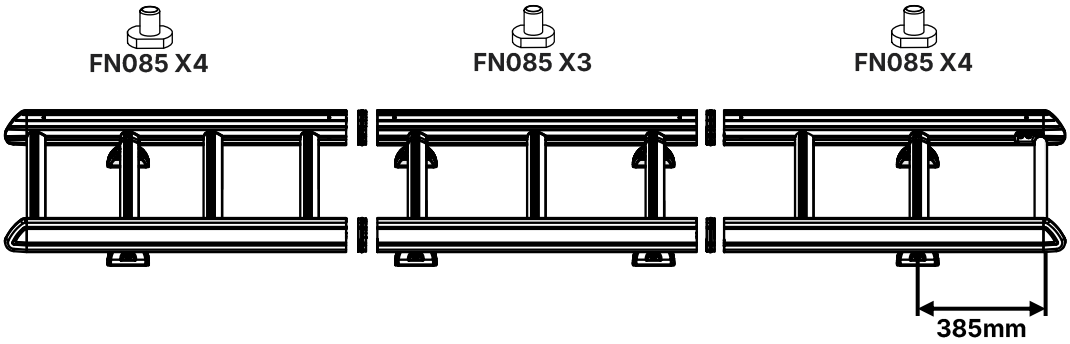

L548/LB548- Jumper/Relay/Boxer/Ducato 2006-, Movano 2020-, L3-H2 (Twin)

Max Load = 150kg/330lbs

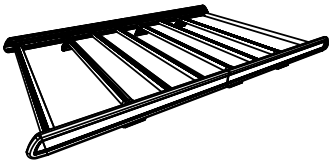

L548/LB548 = 37kg/81lbs

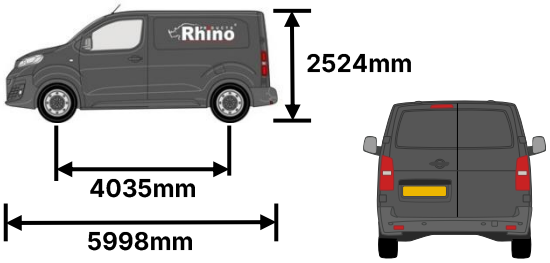

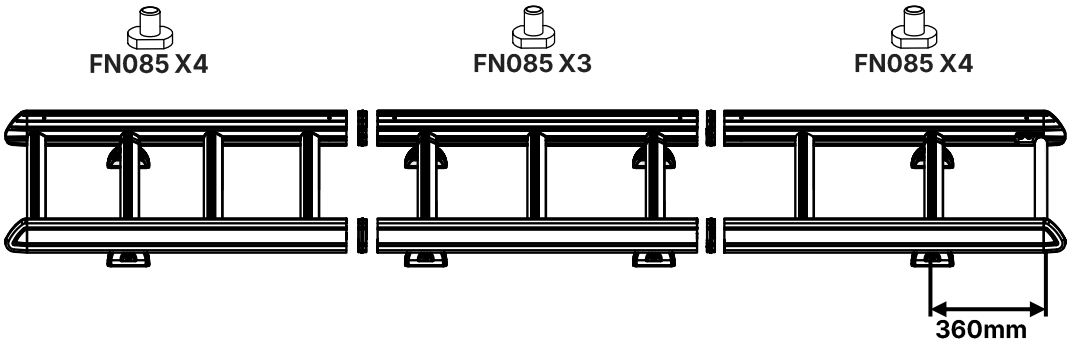

12.

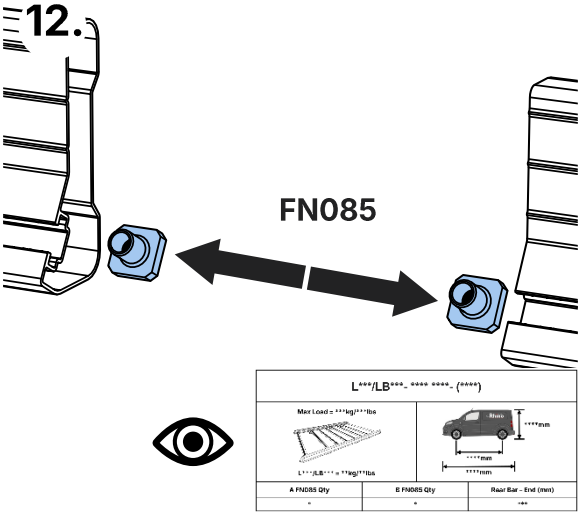

13.

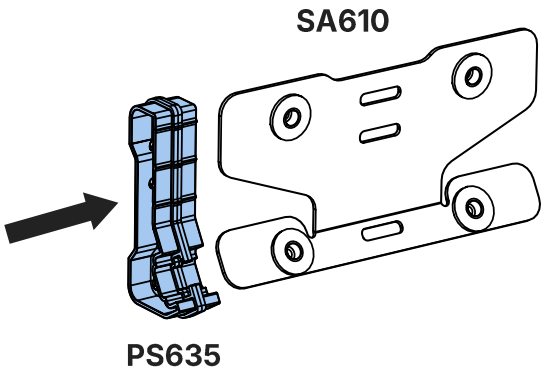

14.

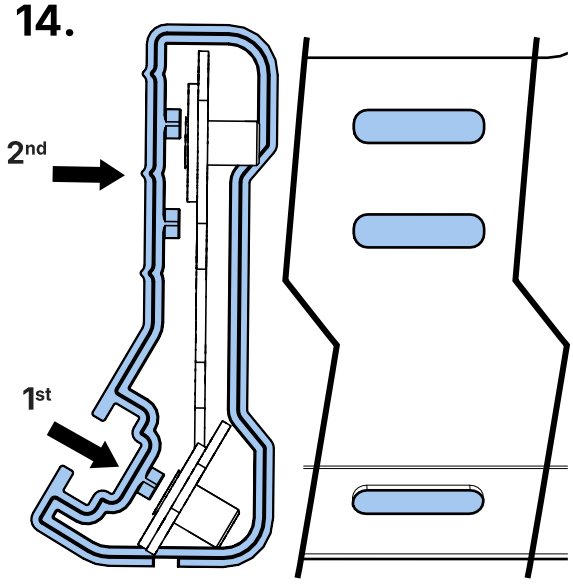

15.

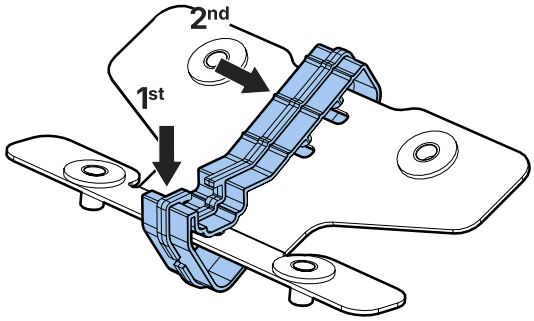

16.

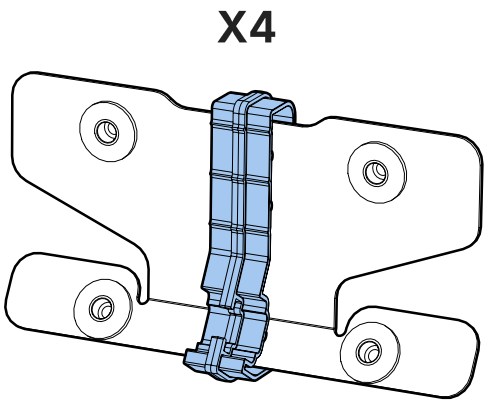

17.

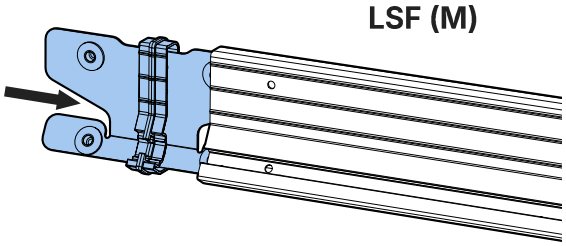

18.

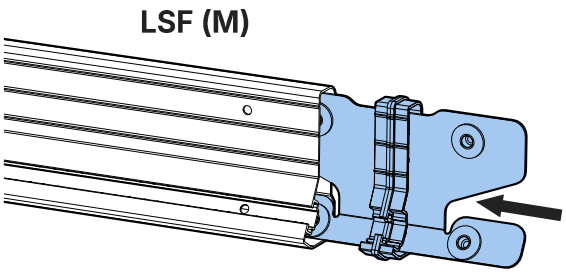

19.

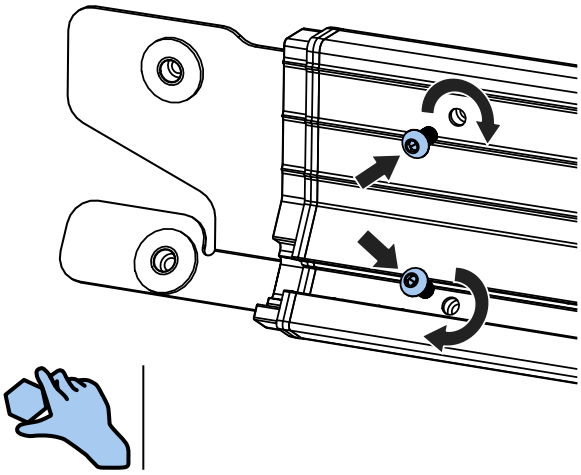

20.

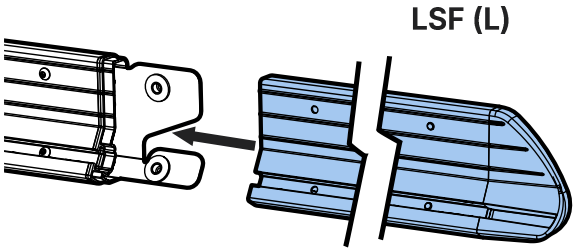

21.

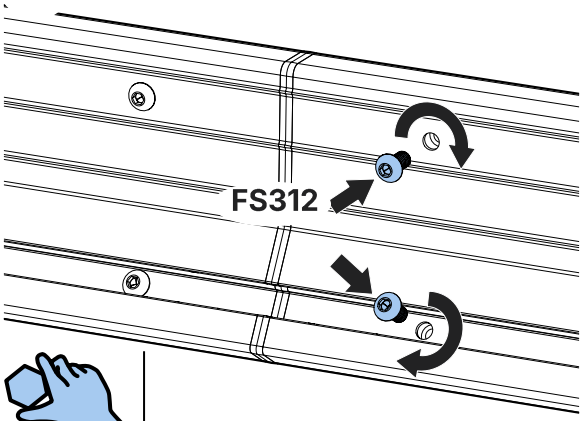

23.

22.

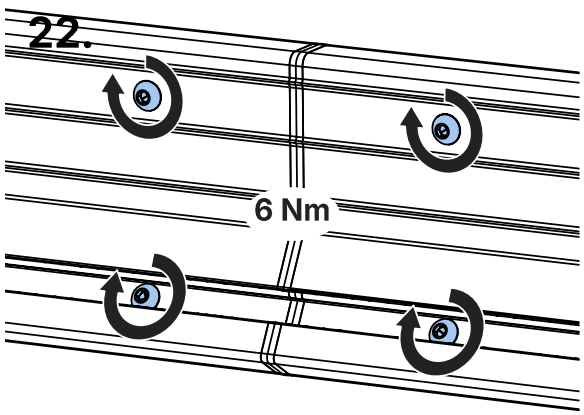



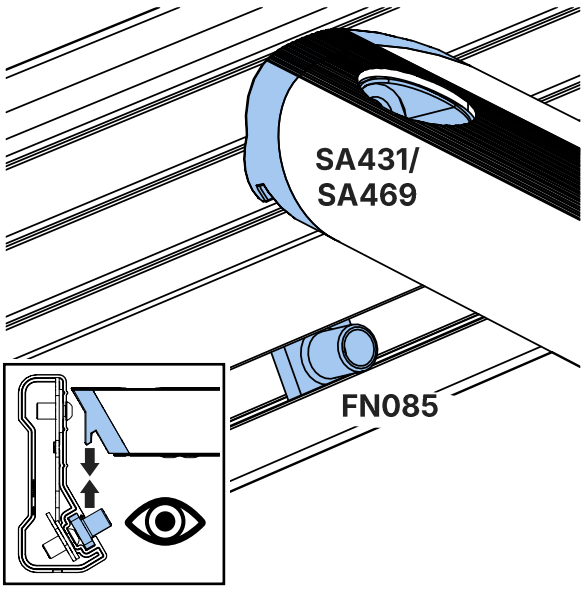

24.

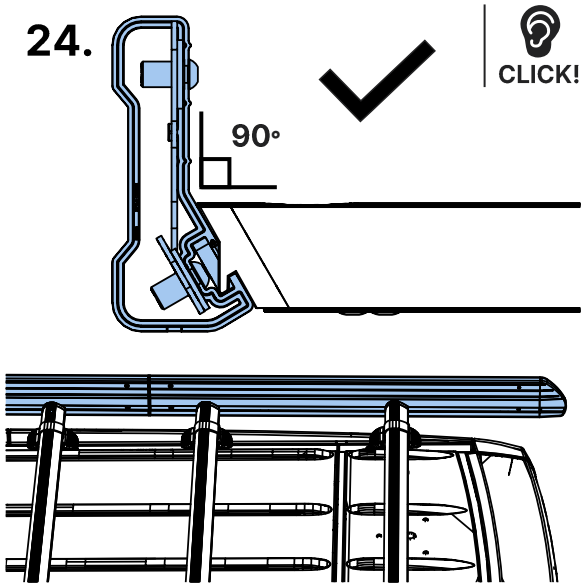

25.

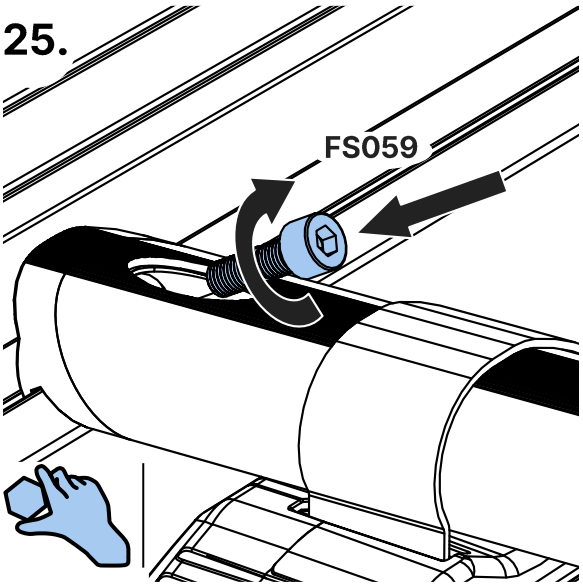

26.

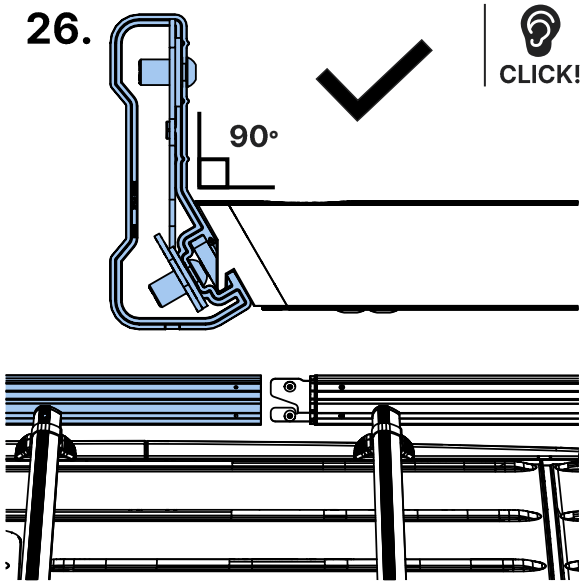

27.

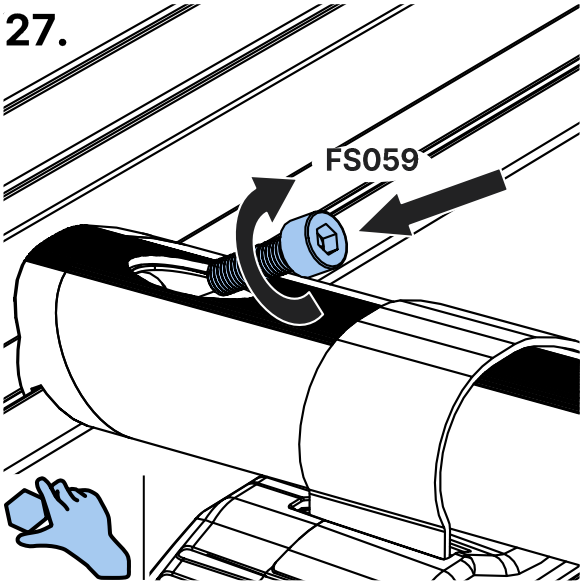

28.

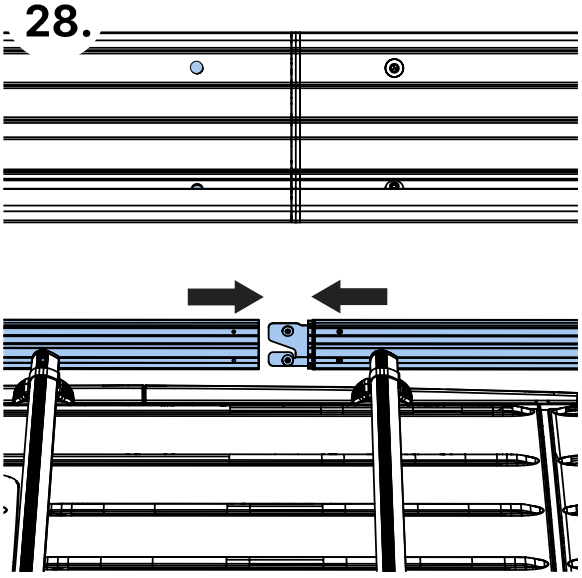

29.

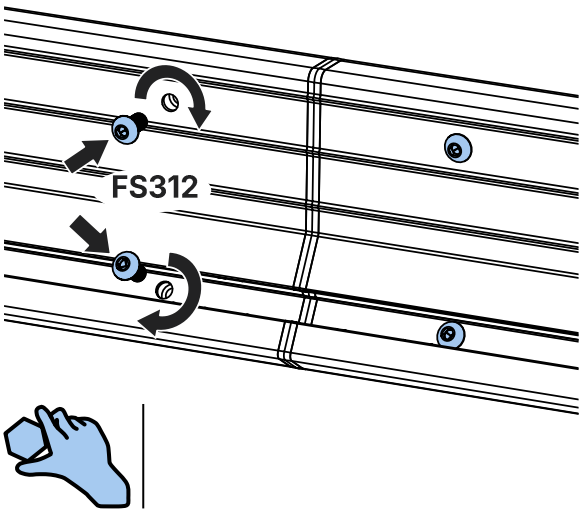

30.

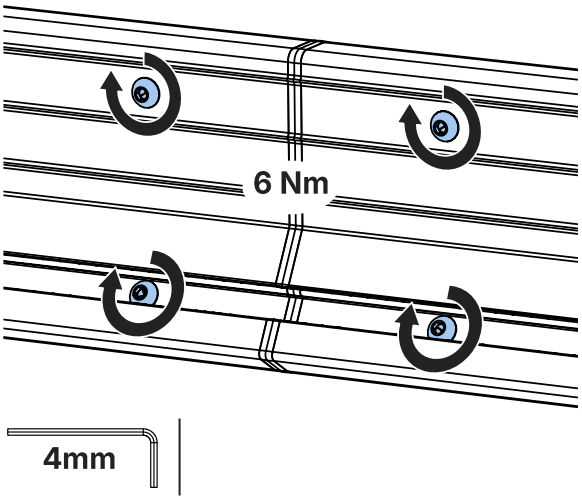

31.

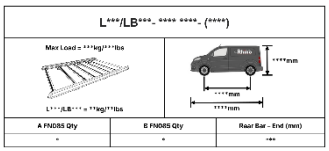

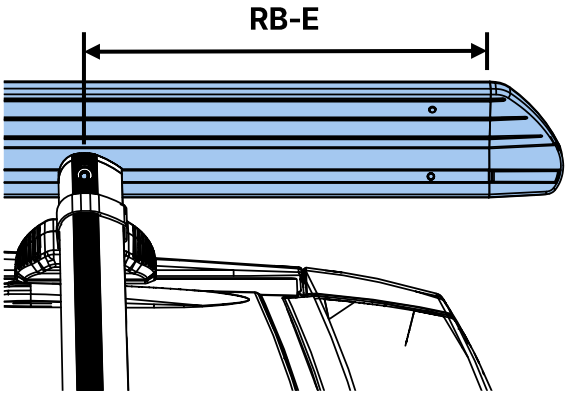

32.

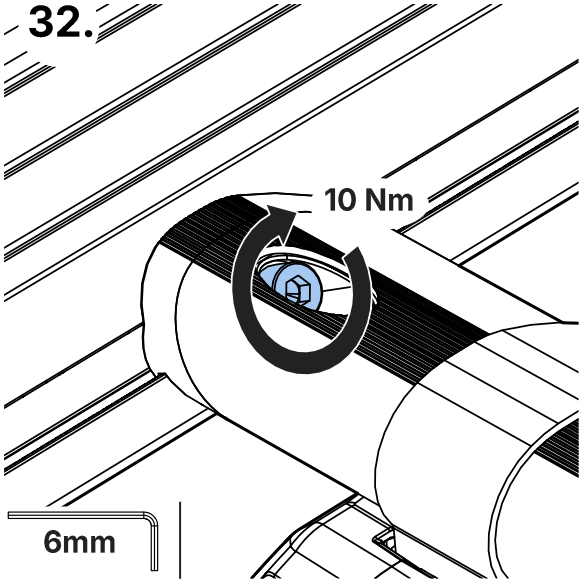

33.

17-32.

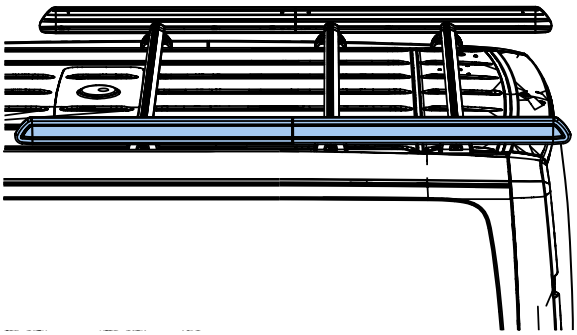

34.

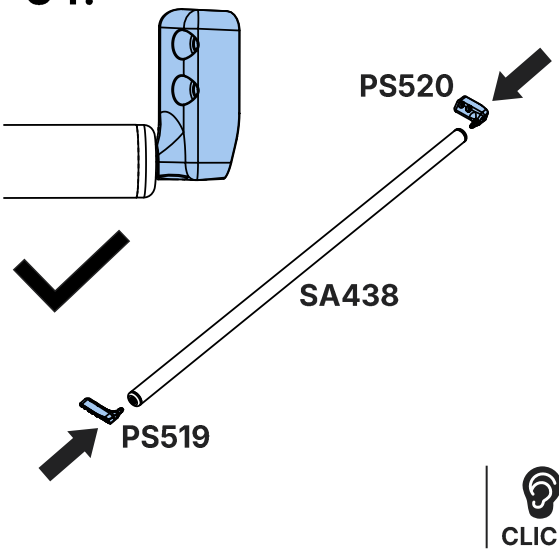

35.

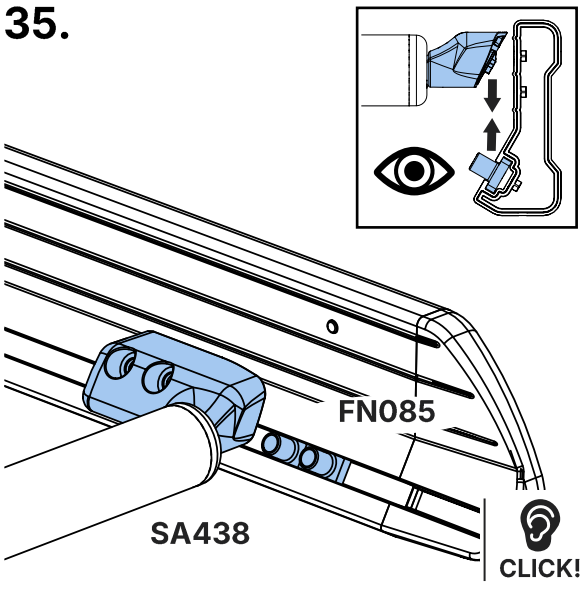

36.

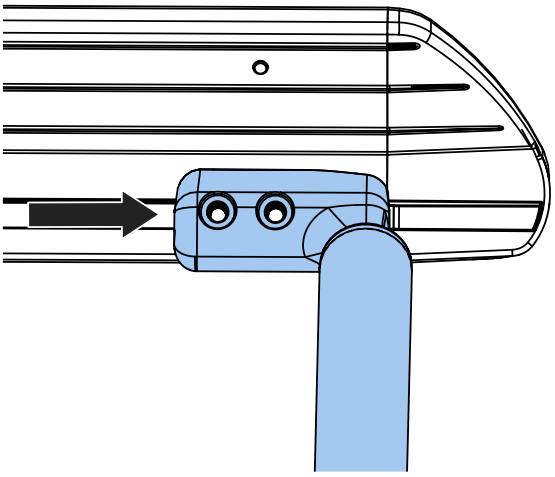

37.

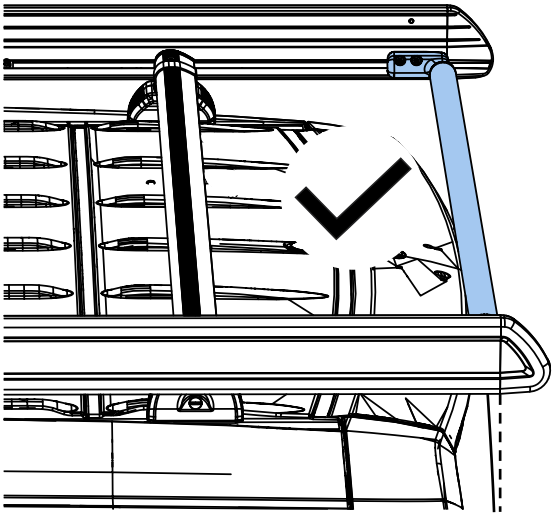

38.

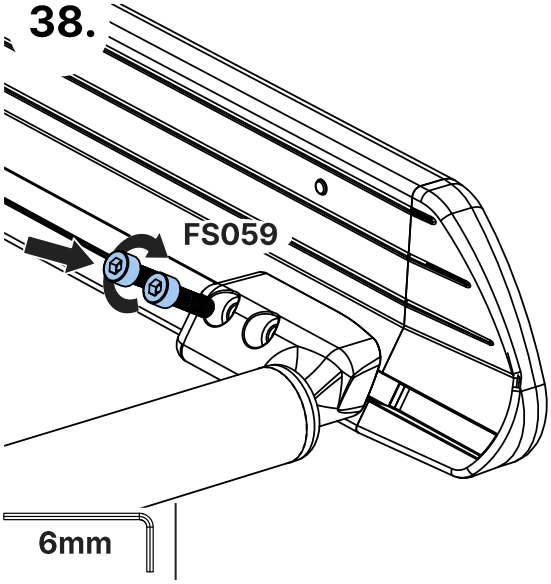

39.

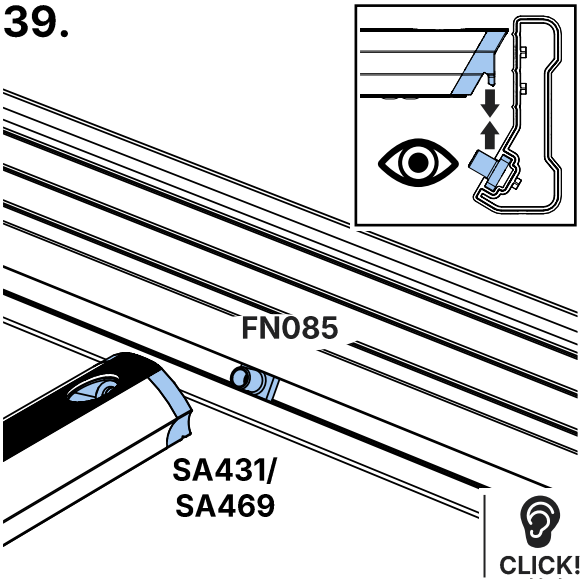

40.

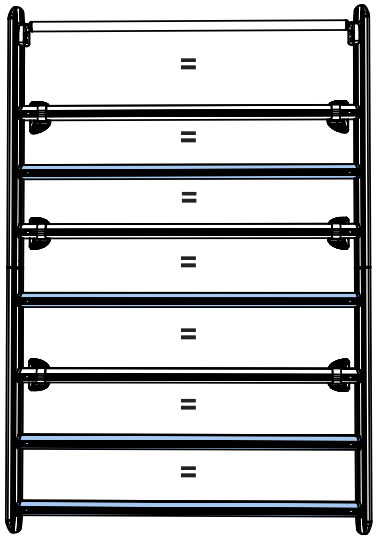

41.

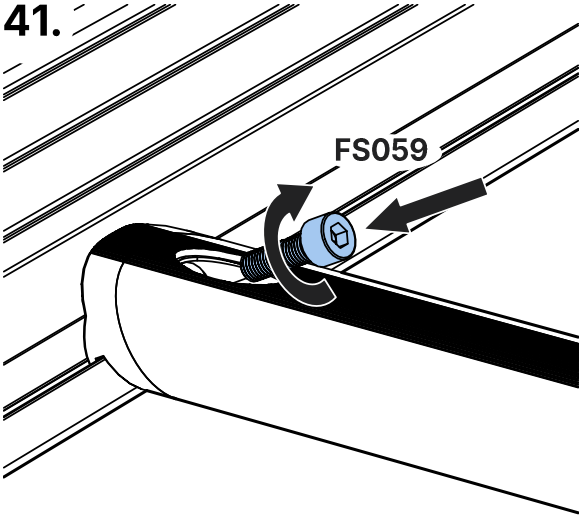

42.

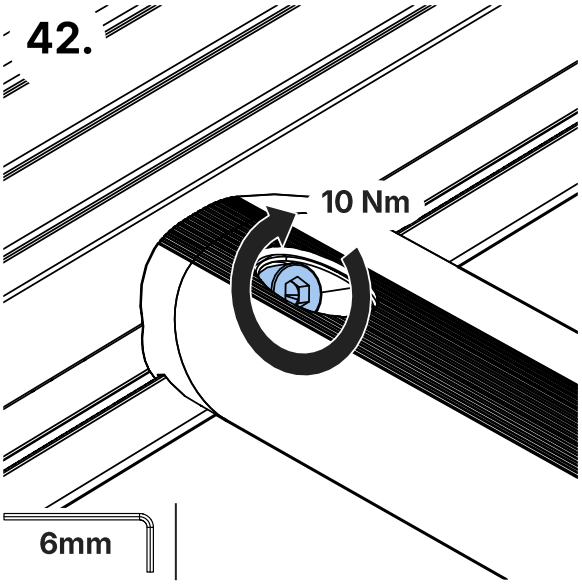

43.

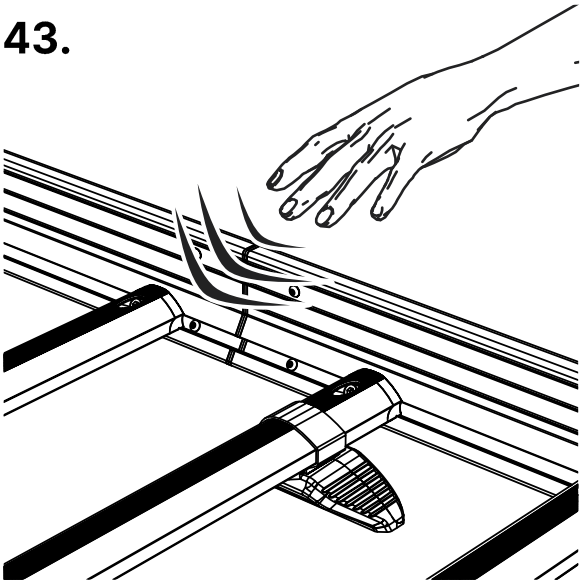

44.

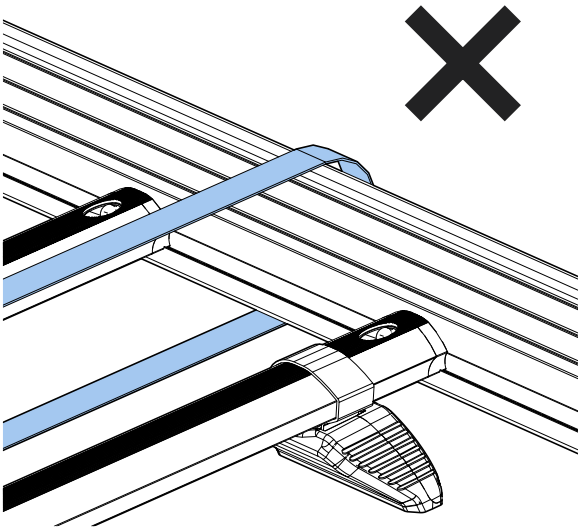

45.

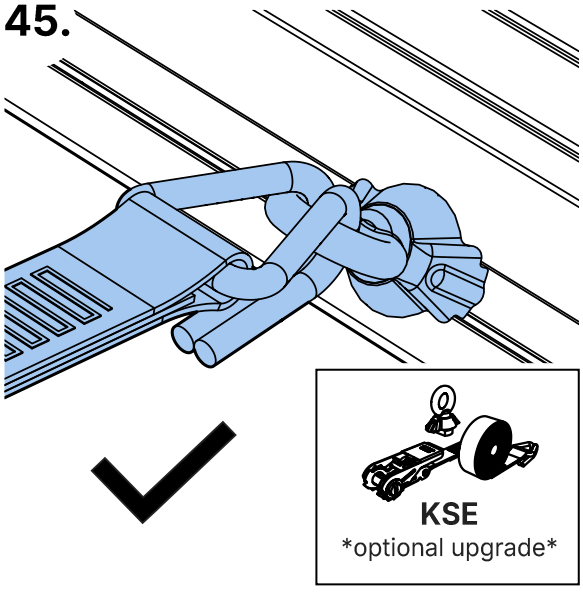

Issue:	Drawn By:	Checked By:	CRF No.:	Date:	Description:
a	SJ	KB	3609	21/10/25	First Issue
b					
c					
d					

Rhino

IA63KE
KammEdge.
Instructions

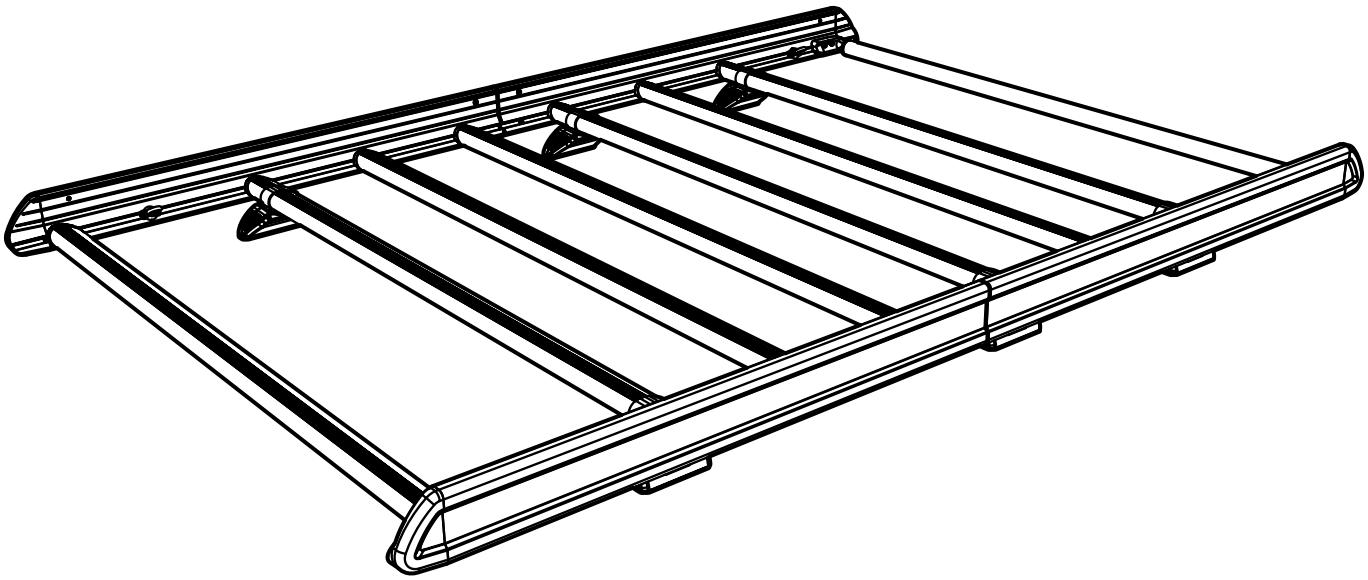

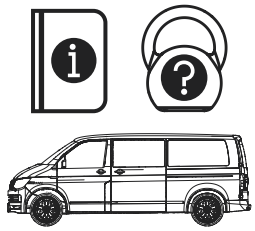

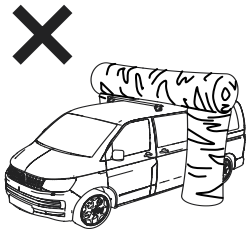

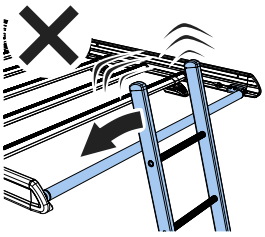



KammEdge

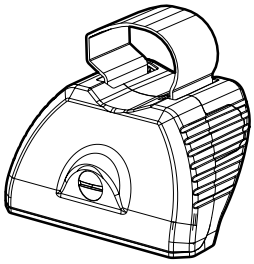

SA397U x 3 ☐

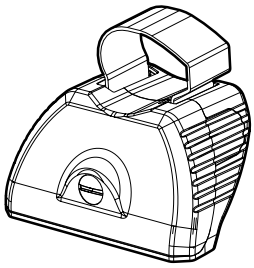

SA398U x 3 ☐

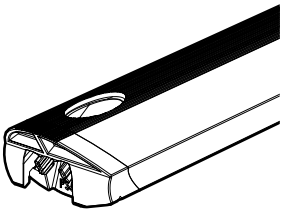

SA430/SA468 x 9 ☐

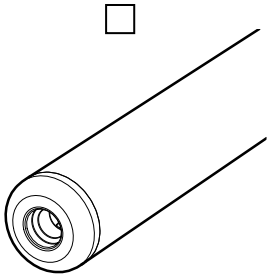

SA439 x 1 ☐

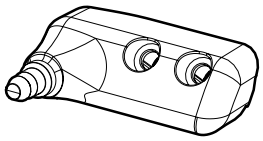

PS519 x 1 ☐

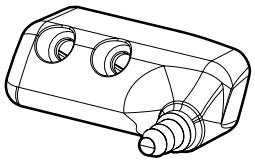

PS520 x 1 ☐

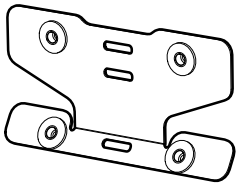

SA610 x 4 ☐

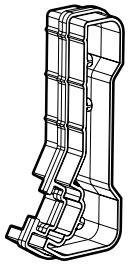

PS635 x 4 ☐

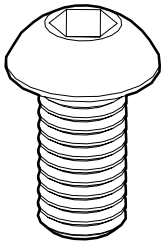

FS323
(M6 x 16) x 16 ☐

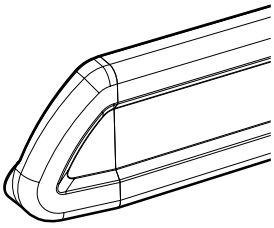

LSF (L) x 2 ☐

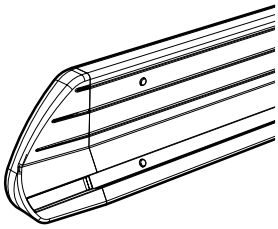

LSF (R) x 2 ☐

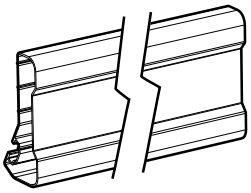

LSF (M) x 2 ☐

Fitting Kit

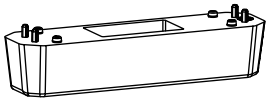

PS180 x 6

☐

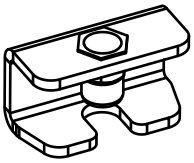

SA068 x 6

☐

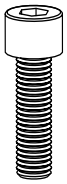

FS059
(M8 x 25) x 22

☐

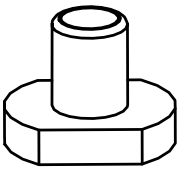

FN085 x 22

☐

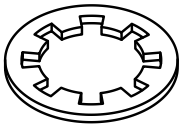

FW009 (M8) x 6

☐

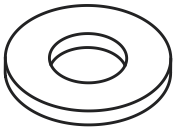

FW002 (M8) x 6

☐

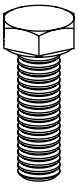

FS067
(M8 x 20) x 6

☐

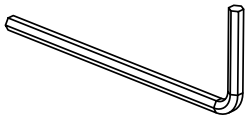

FT05 x 1

☐



FT01 x 1

☐

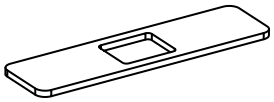

PS047 x 6

☐

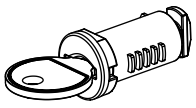

C04 x 6
optional upgrade

1.

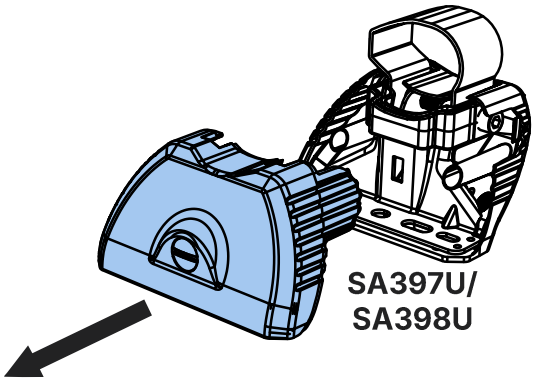
SA397U/
SA398U

2.

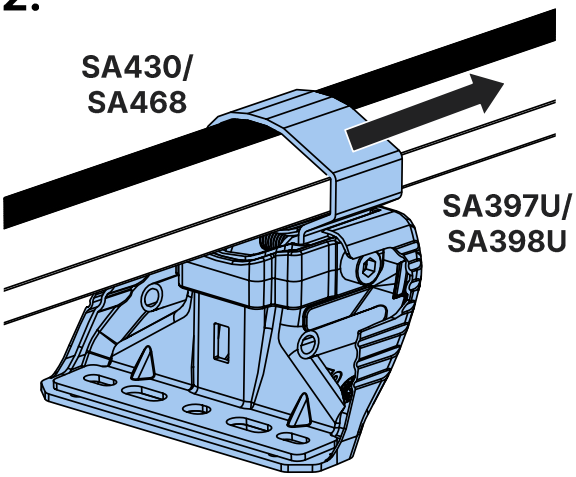
SA430/
SA468
SA397U/
SA398U

3.

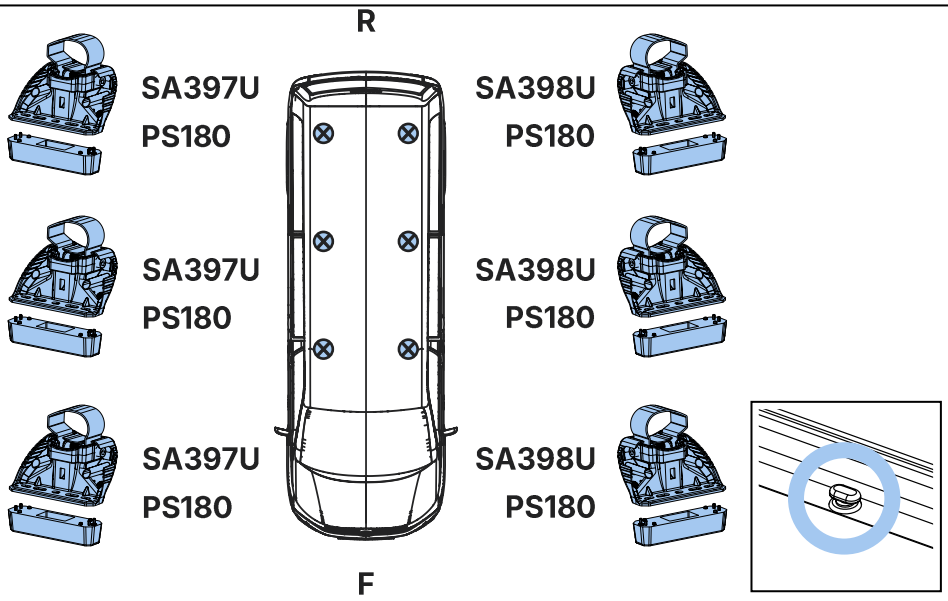
R
SA397U
PS180
SA397U
PS180
SA397U
PS180
SA398U
PS180
SA398U
PS180
SA398U
PS180
F

4.

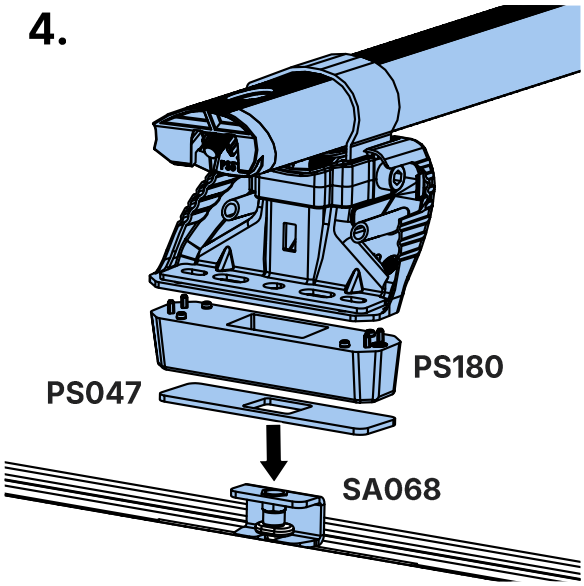
PS180
PS047
SA068

5.

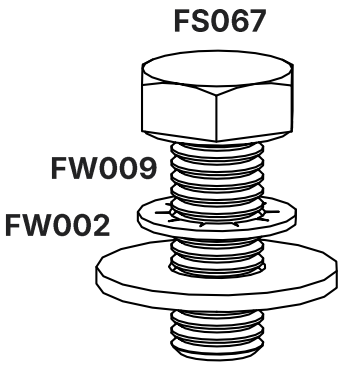
FS067
FW009
FW002

6.

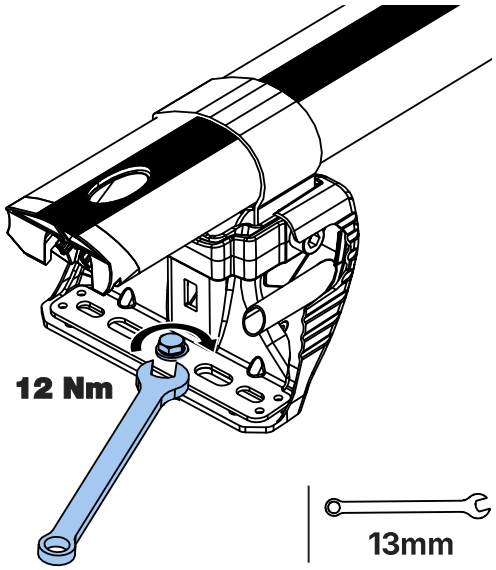

7.

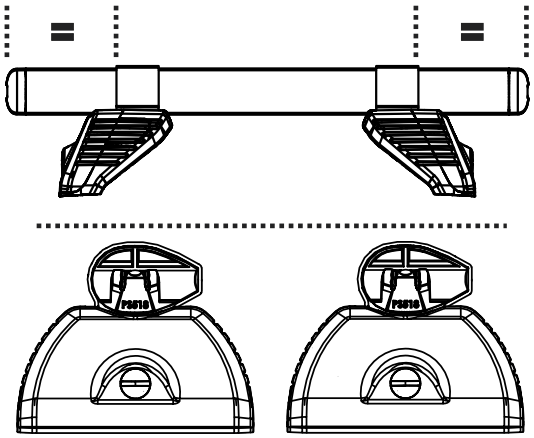

8.

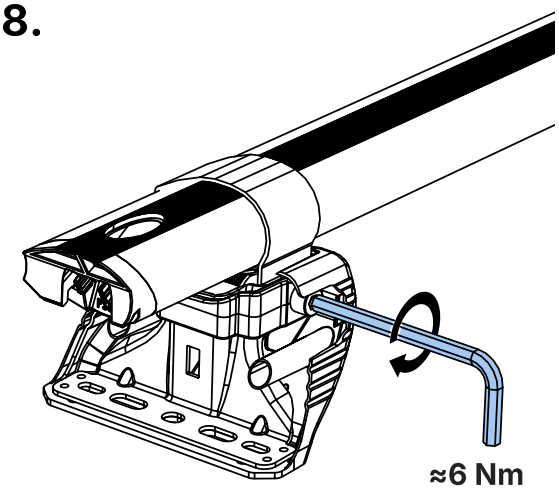

9.

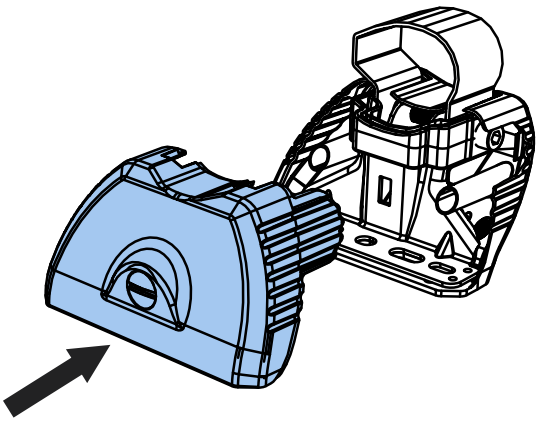

10.

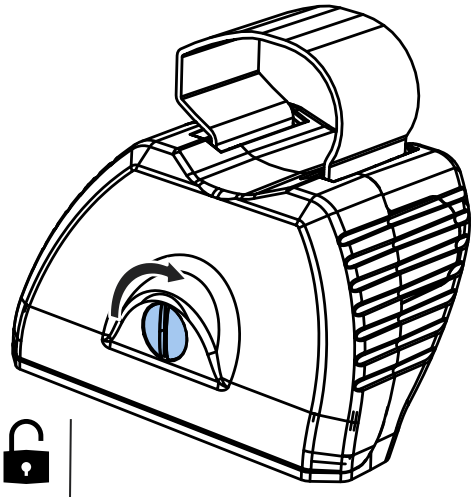

11.

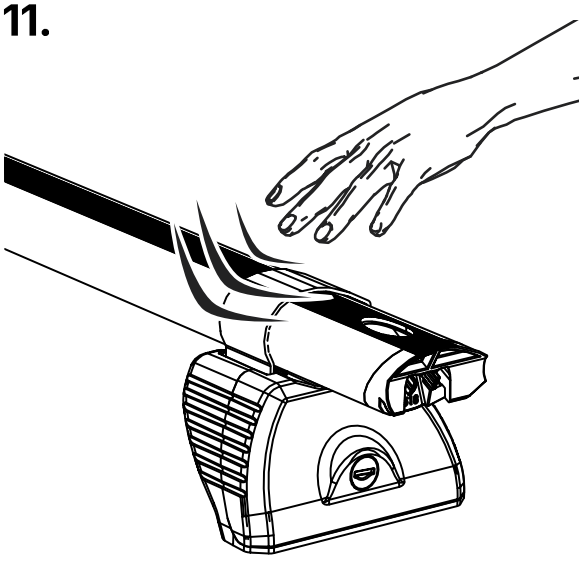

L652/LB652- Jumper/Relay/Boxer/Ducato 2006-, Movano 2020-, L3-H3 (Twin)

Max Load = 150kg/330lbs

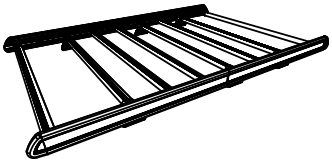

L652/LB652 = 33kg/72lbs

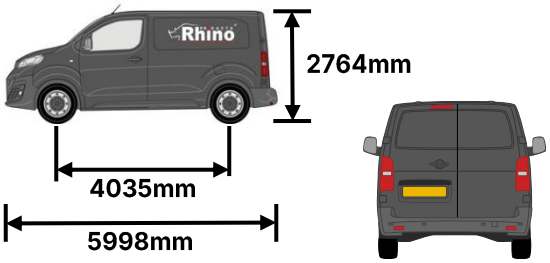

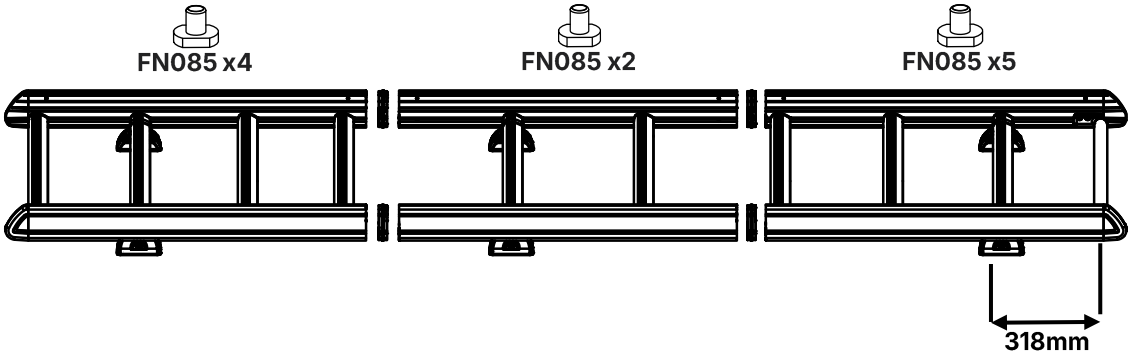

12.

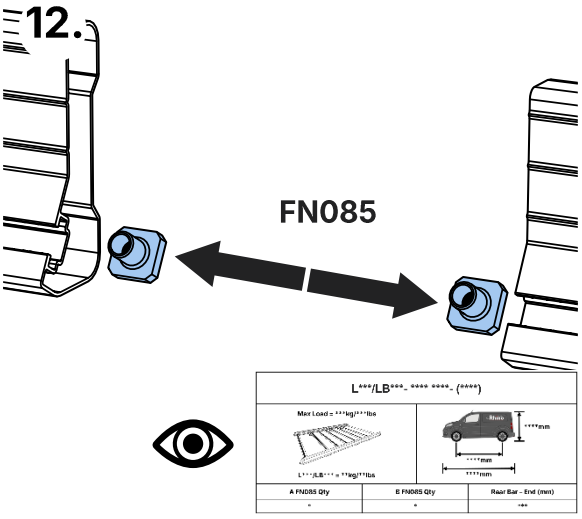

13.

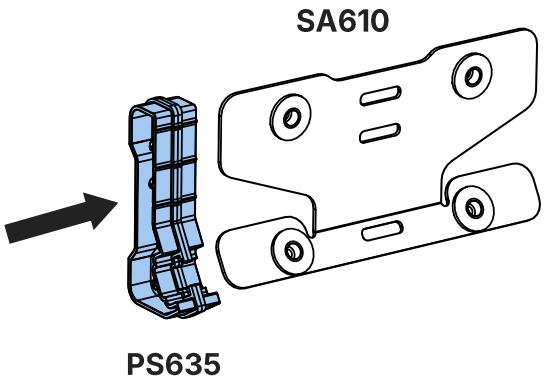

14.

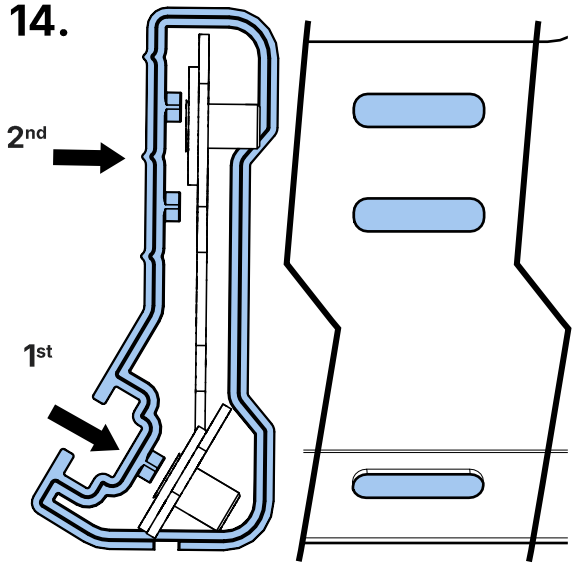

15.

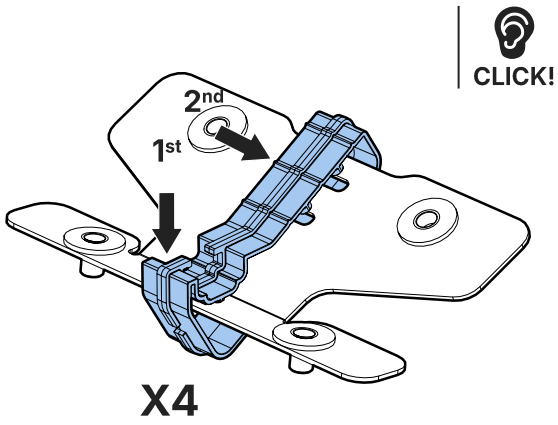

16.

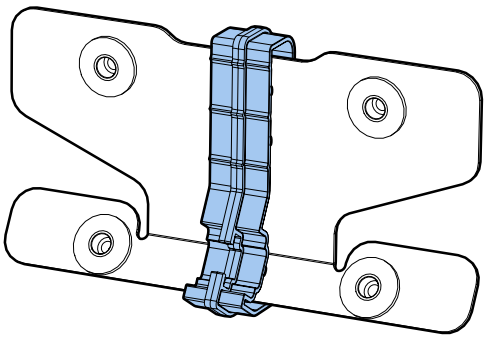

17.

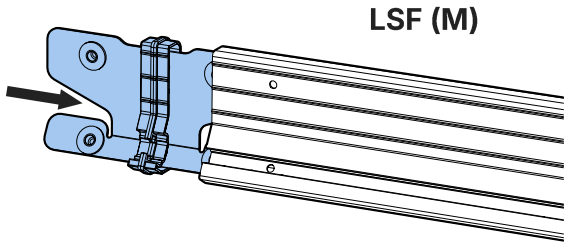

18.

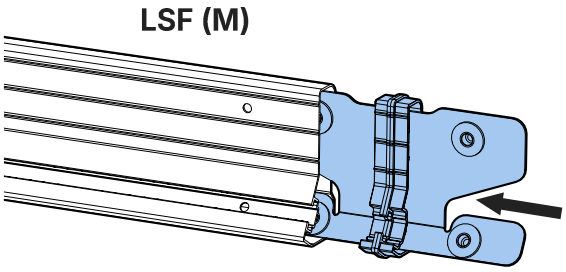

19.

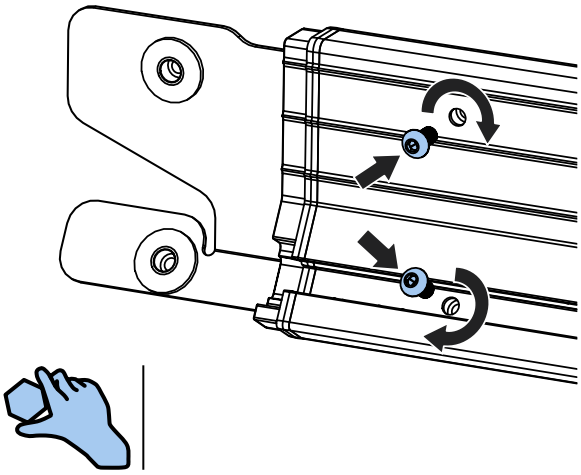

20.

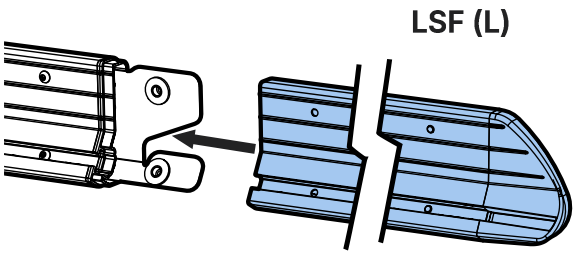

21.

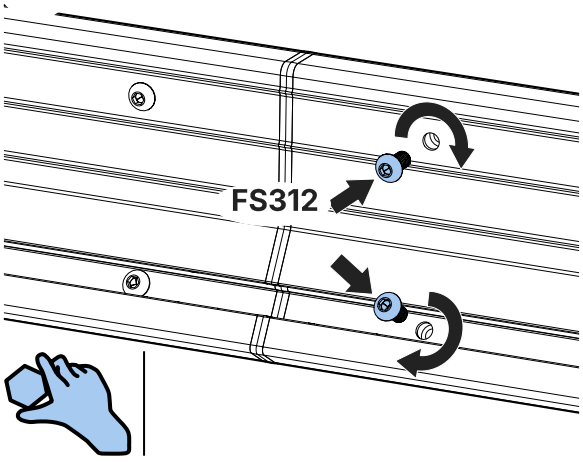

22.

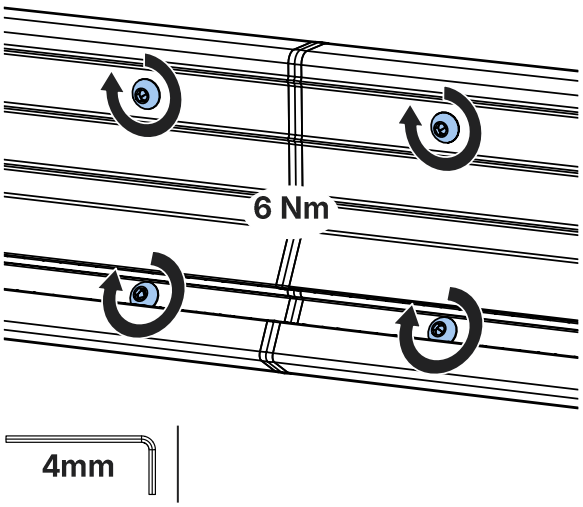

23.

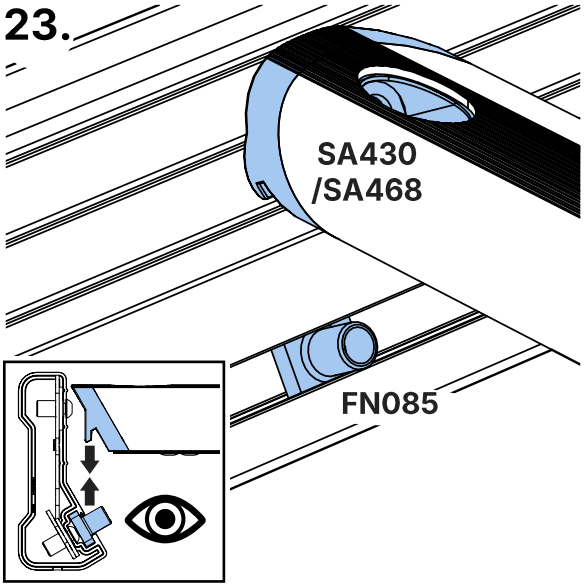

24.

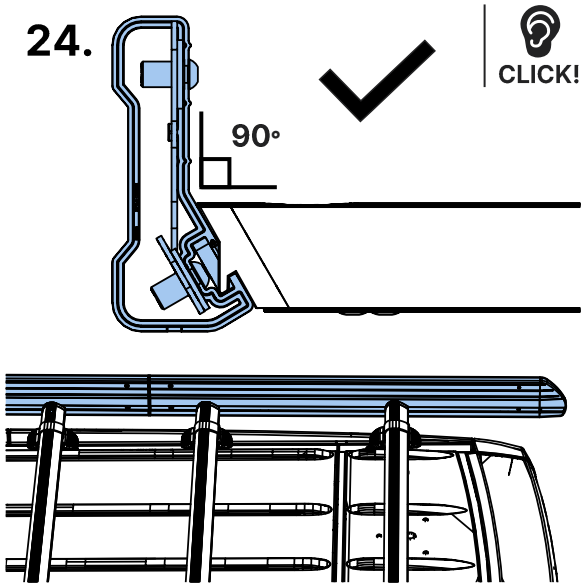

25.

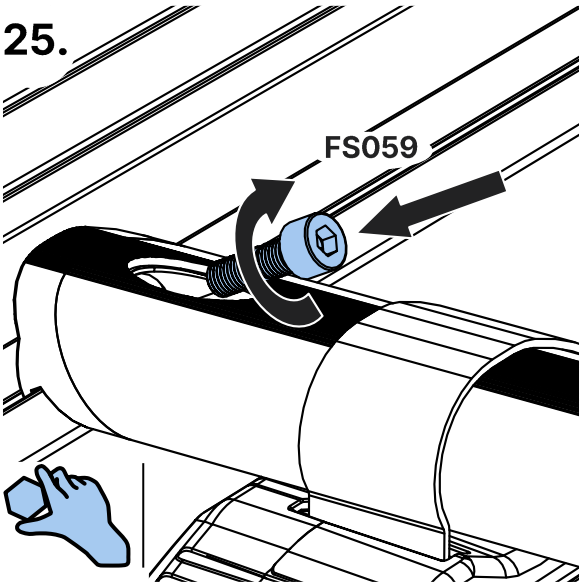

26.

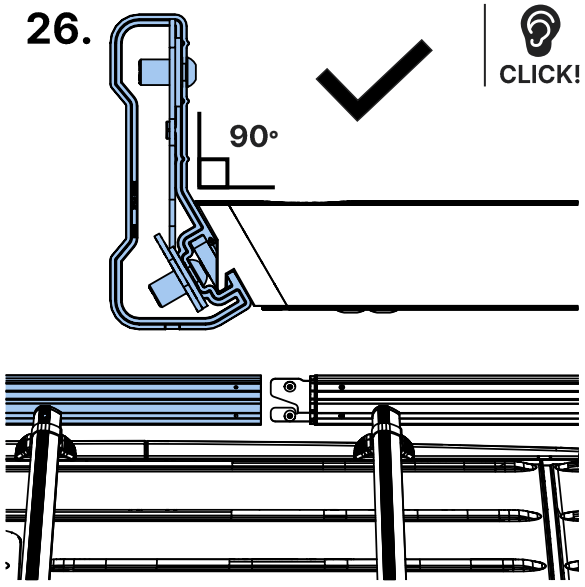

27.

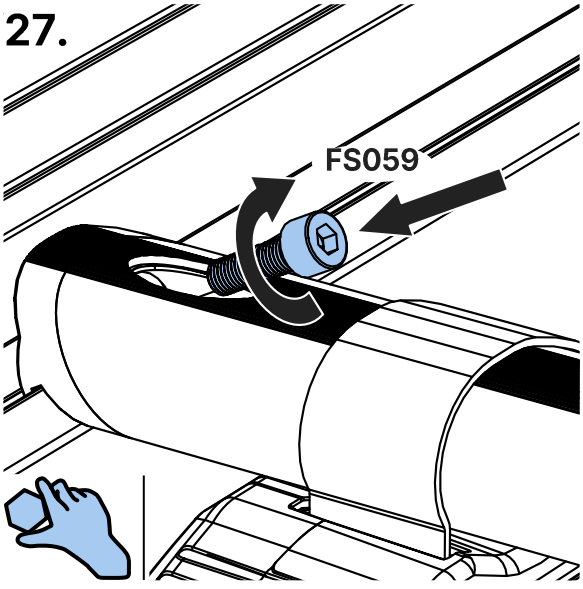

28.

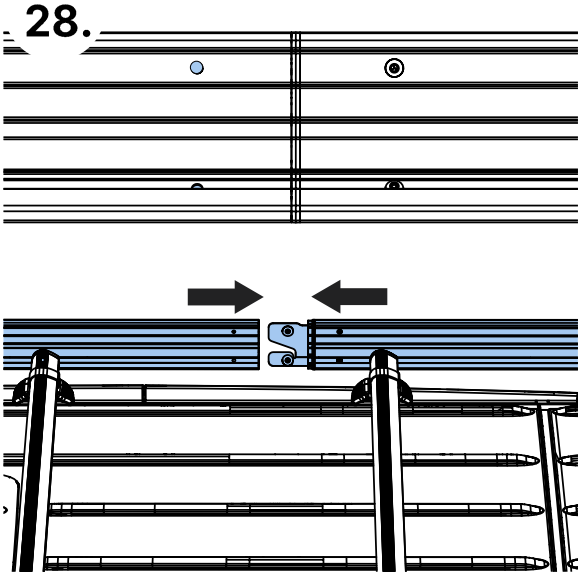

29.

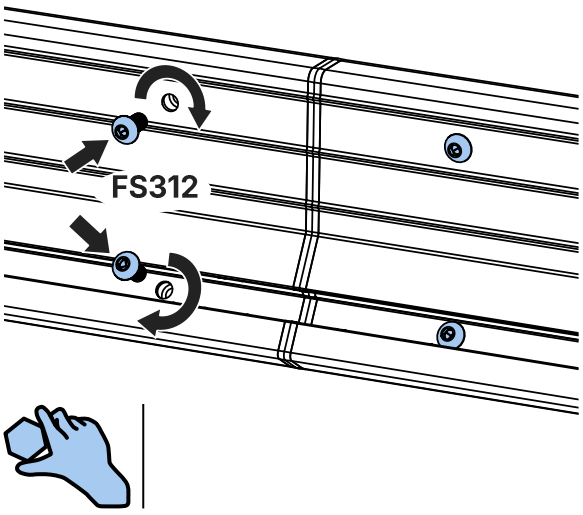

30.

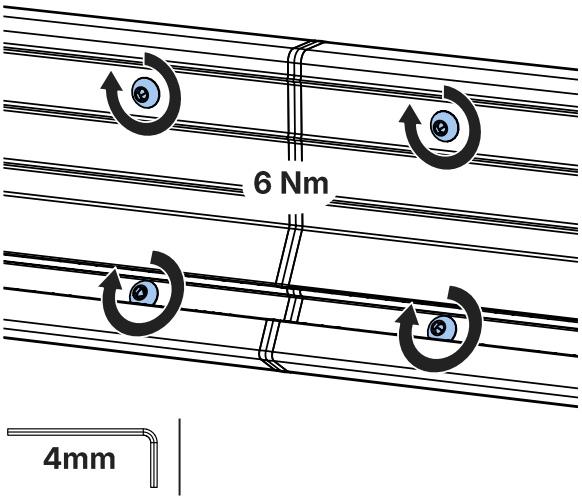

31.

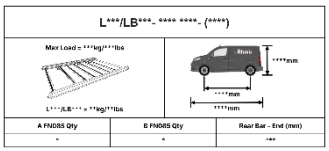

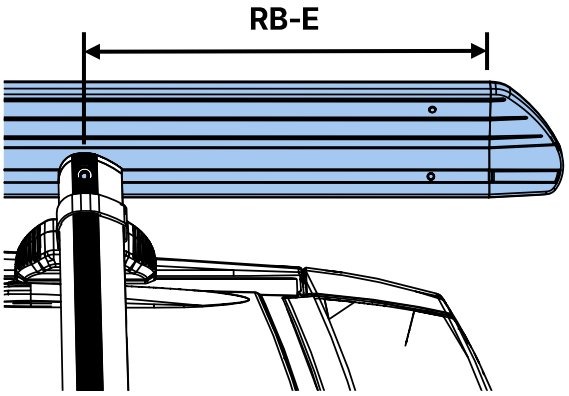

32.

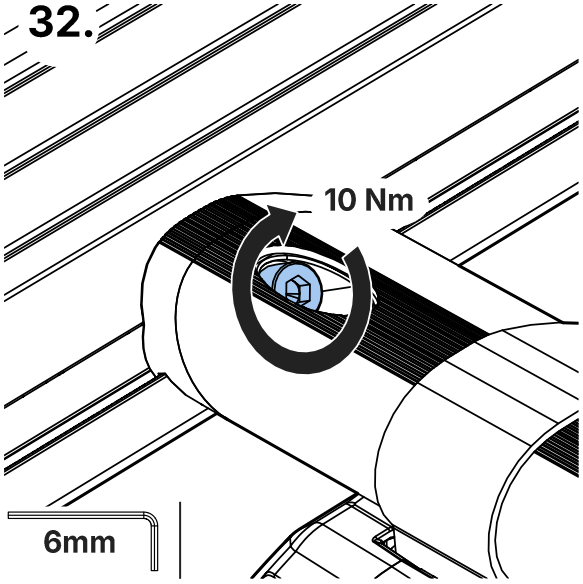

33.

17-32.

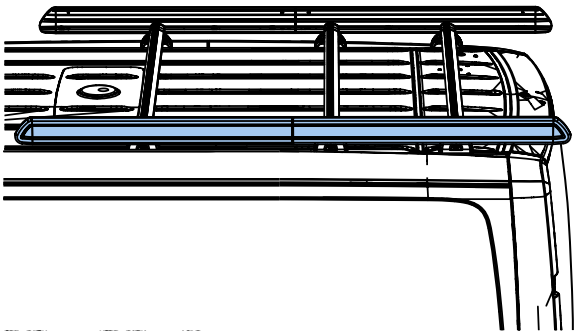

34.

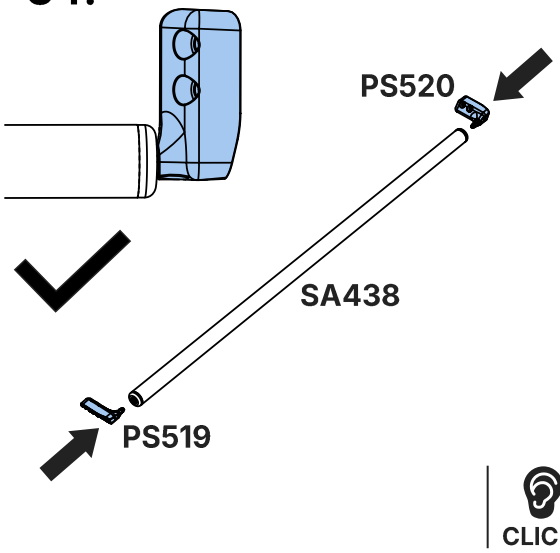

35.

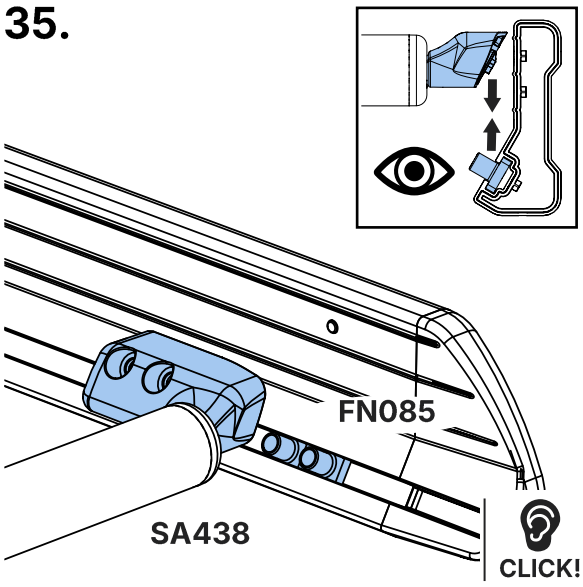

36.

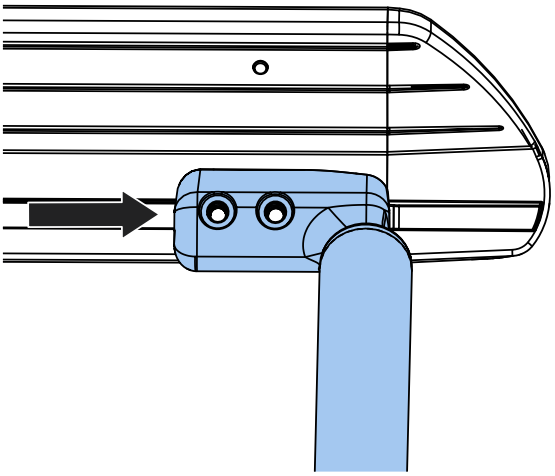

37.

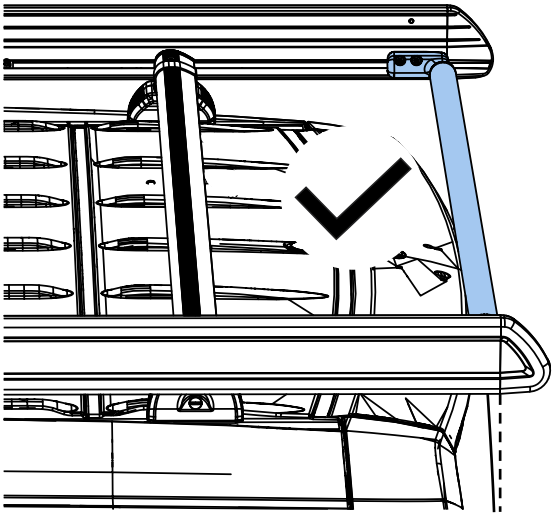

38.

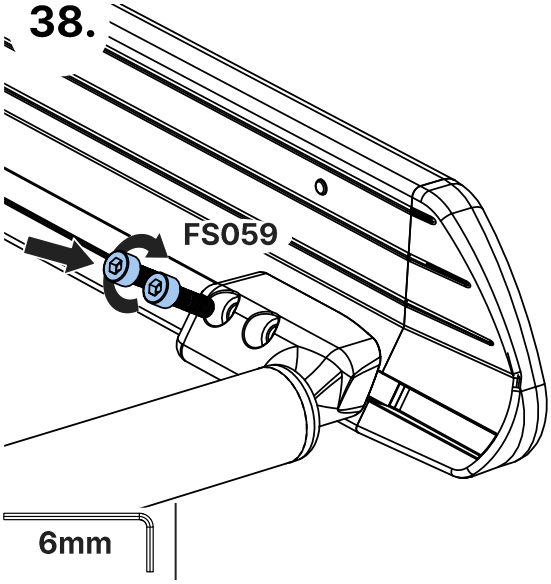

39.

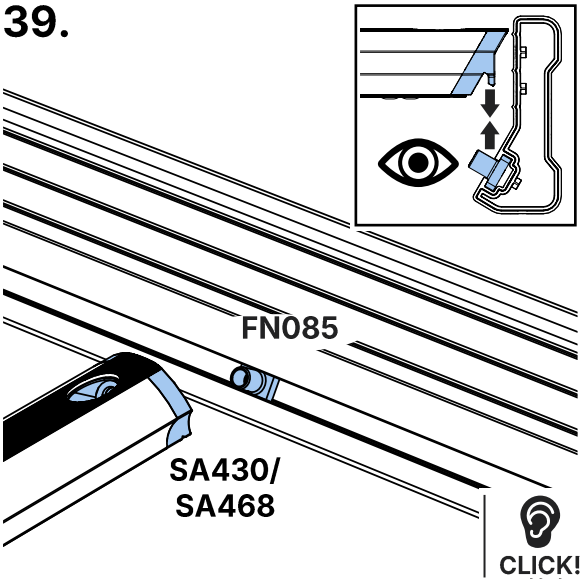

40.

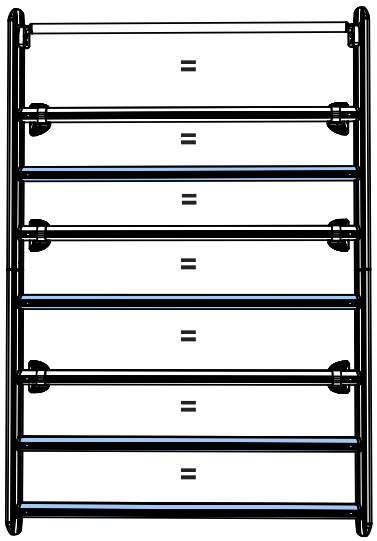

41.

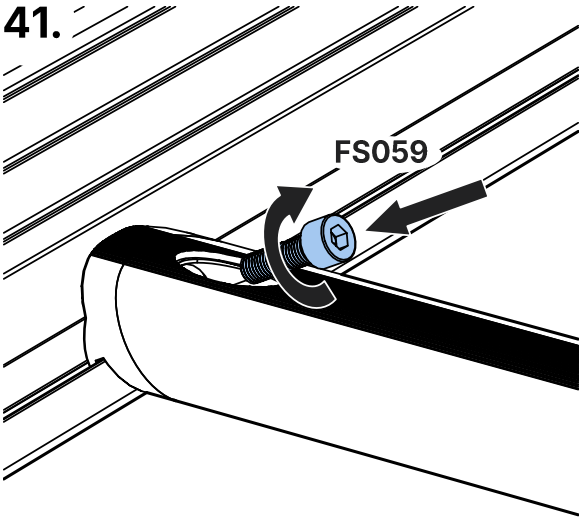

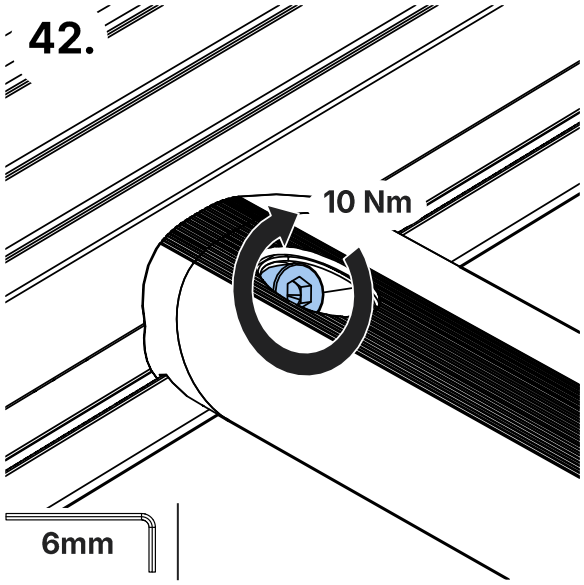
42.
10 Nm
6mm

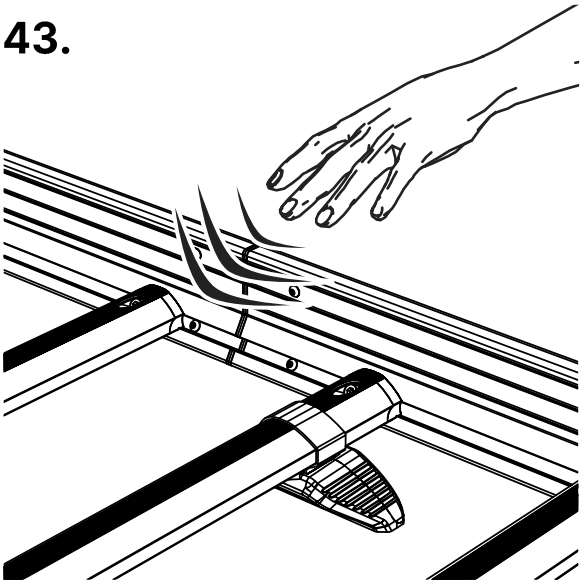
43.

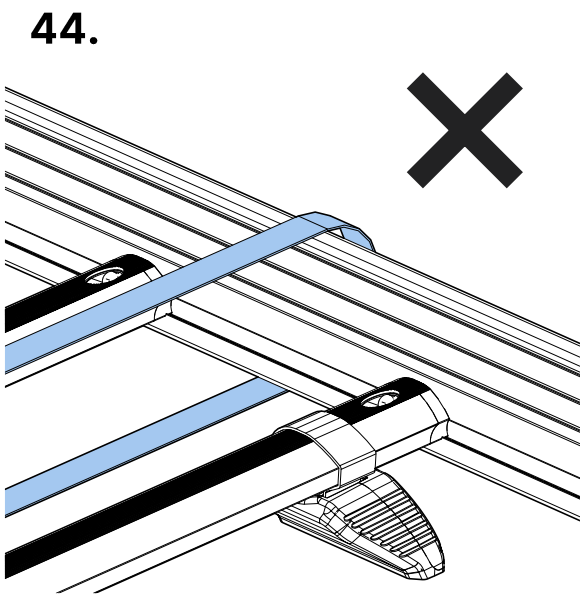
44.

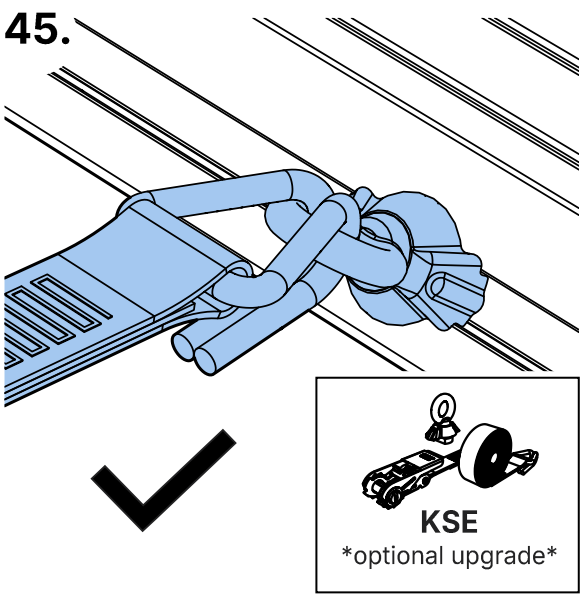
45.
KSE
optional upgrade

Issue:	Drawn By:	Checked By:	CRF No.:	Date:	Description:
a	SJ	KB	3609	21/10/25	First Issue
b					
c					
d					

IA64KE
KammEdge.
Instructions

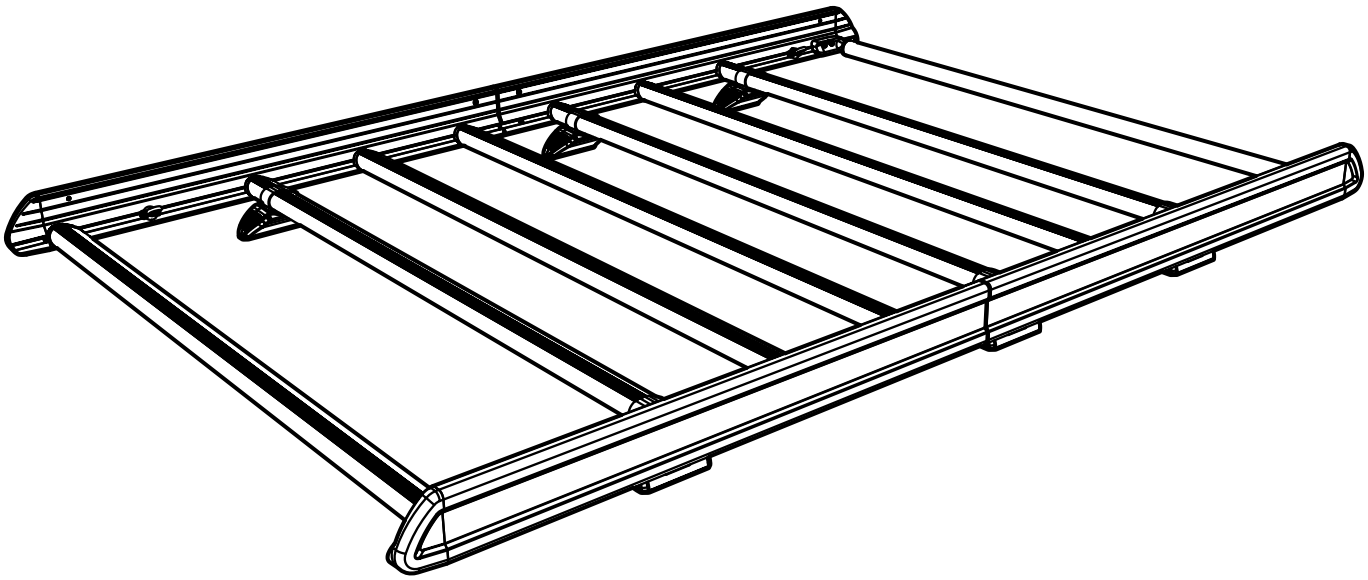

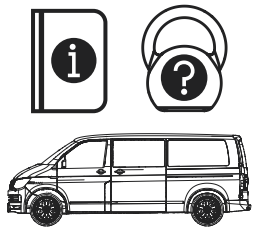

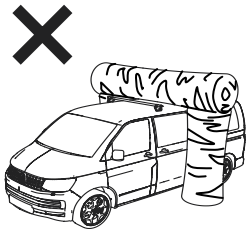

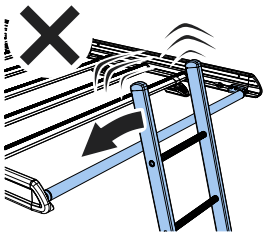



KammEdge

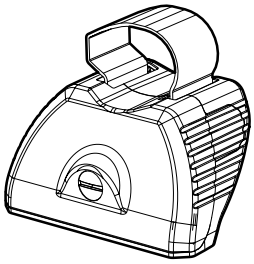

SA397U x 4 ☐

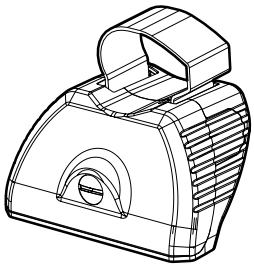

SA398U x 4 ☐

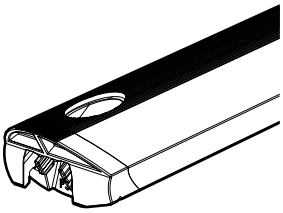

SA430/SA468 x 9 ☐

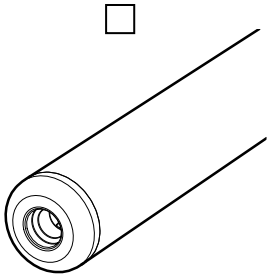

SA439 x 1 ☐

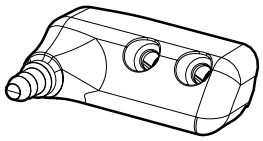

PS519 x 1 ☐

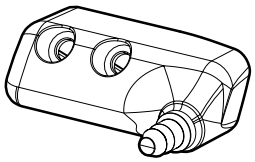

PS520 x 1 ☐

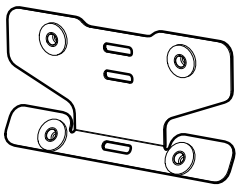

SA610 x 4 ☐

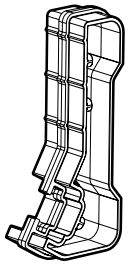

PS635 x 4 ☐

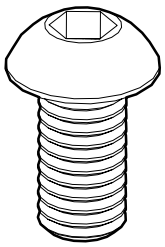

FS323
(M6 x 16) x 16 ☐

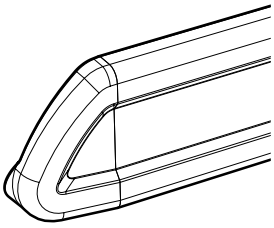

LSF (L) x 2 ☐

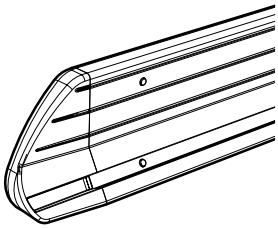

LSF (R) x 2 ☐

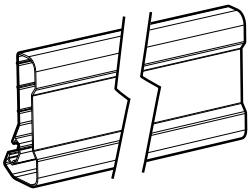

LSF (M) x 2 ☐

Fitting Kit

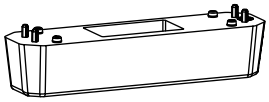

PS180 x 8

☐

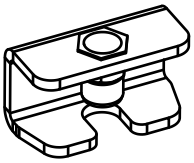

SA068 x 8

☐

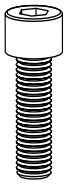

FS059
(M8 x 25) x 22

☐

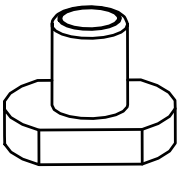

FN085 x 22

☐

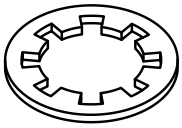

FW009 (M8) x 8

☐

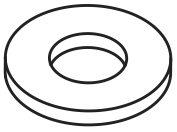

FW002 (M8) x 8

☐

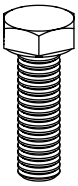

FS067
(M8 x 20) x 8

☐

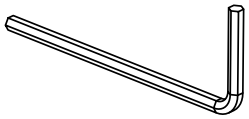

FT05 x 1

☐



FT01 x 1

☐

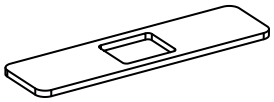

PS047 x 8

☐

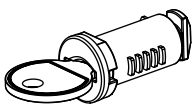

C04 x 8
optional upgrade

1.

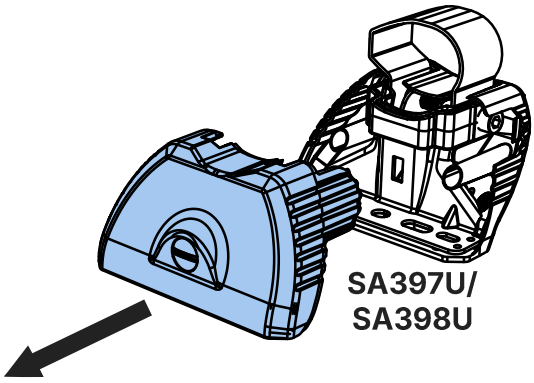
SA397U/
SA398U

2.

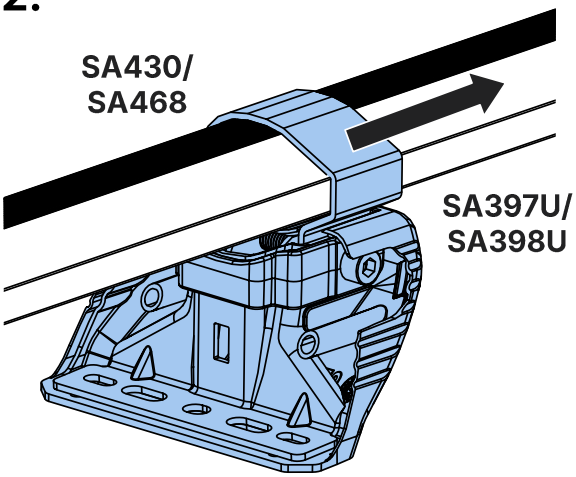
SA430/
SA468
SA397U/
SA398U

3.

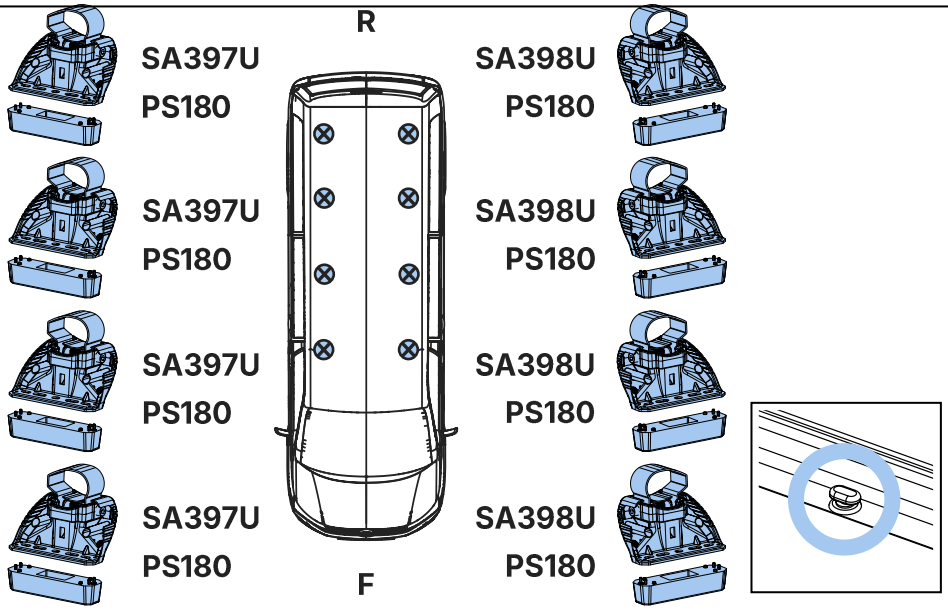
R
SA397U
PS180
SA397U
PS180
SA397U
PS180
SA397U
PS180
SA398U
PS180
SA398U
PS180
SA398U
PS180
SA398U
PS180
F

4.

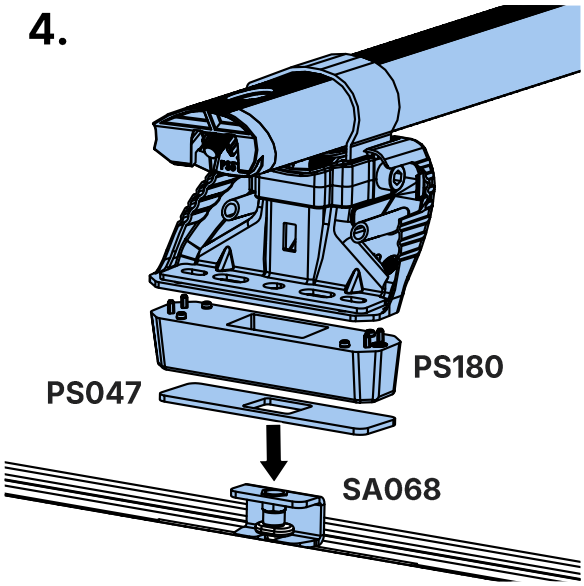
PS180
PS047
SA068

5.

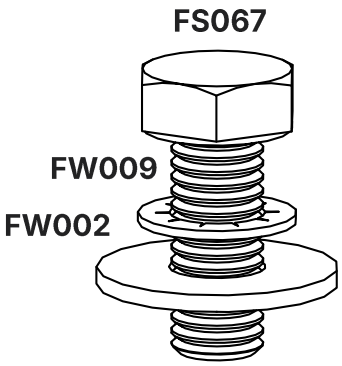
FS067
FW009
FW002

6.

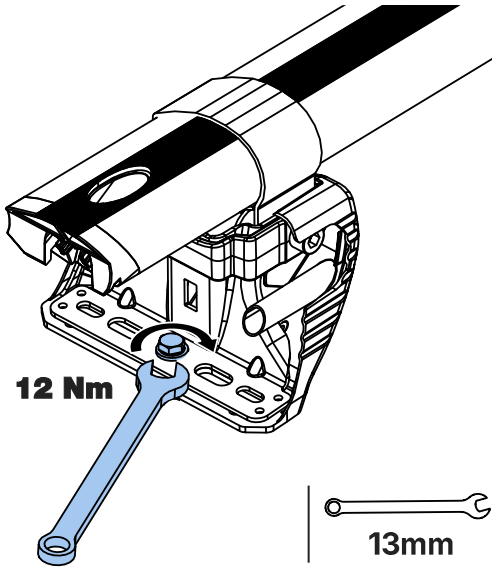

7.

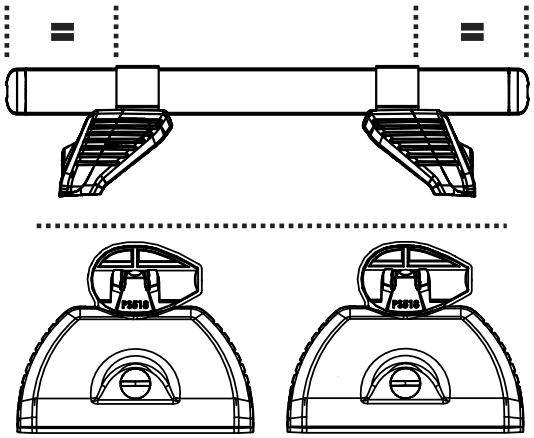

8.

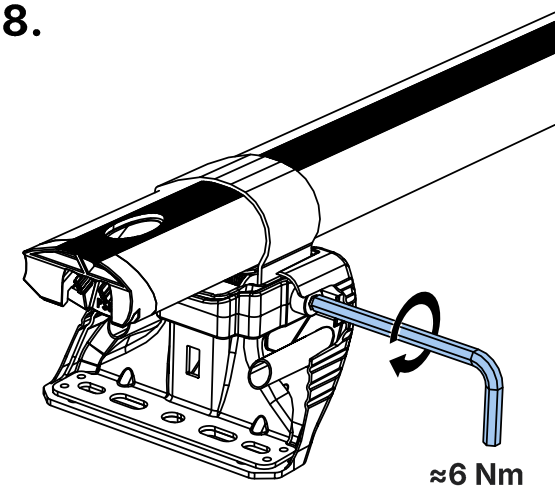

9.

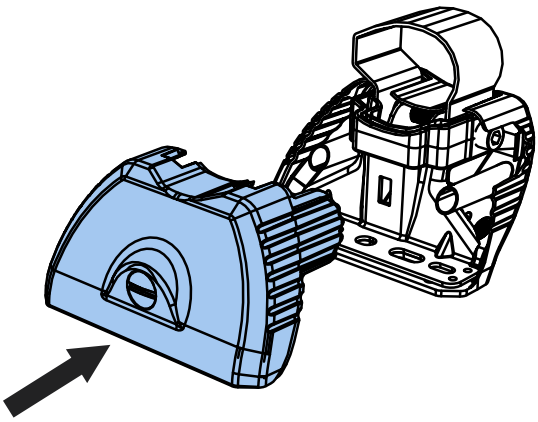

10.

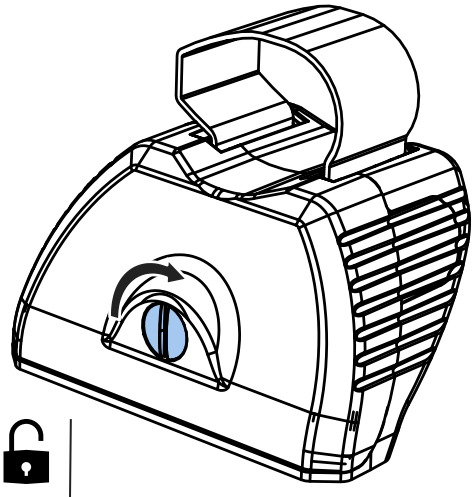

11.

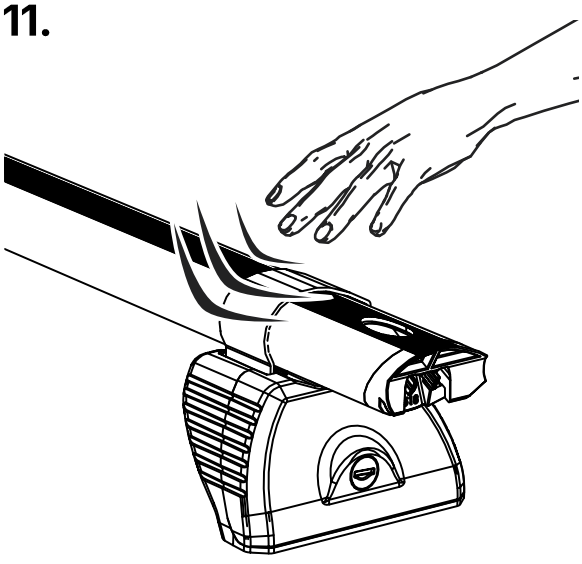

L618/LB618- Jumper/Relay/Boxer/Ducato 2006-, Movano 2020-, L4-H3 (Twin)

Max Load = 150kg/330lbs

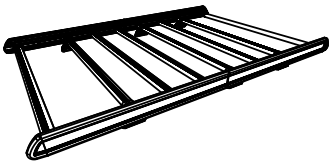

L618/LB618 = 36kg/78lbs

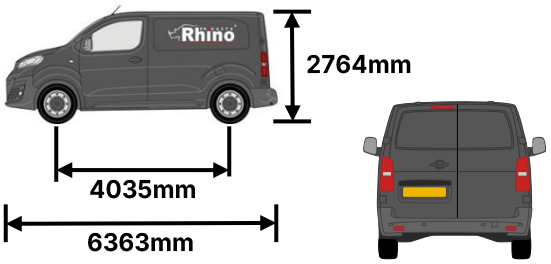

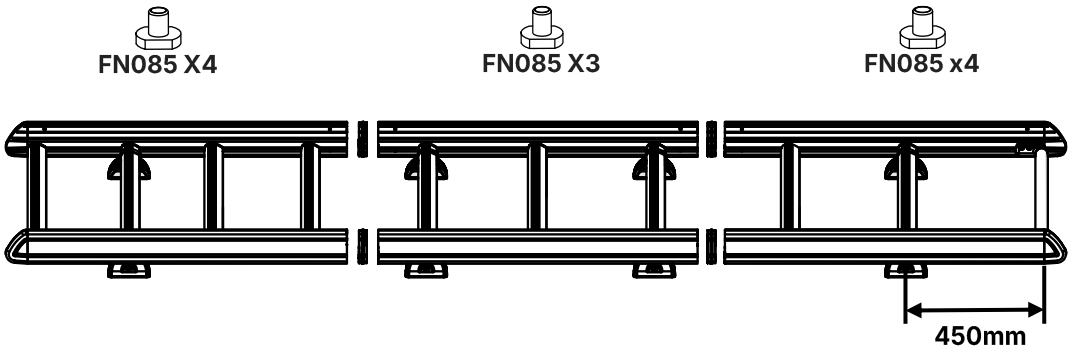

12.

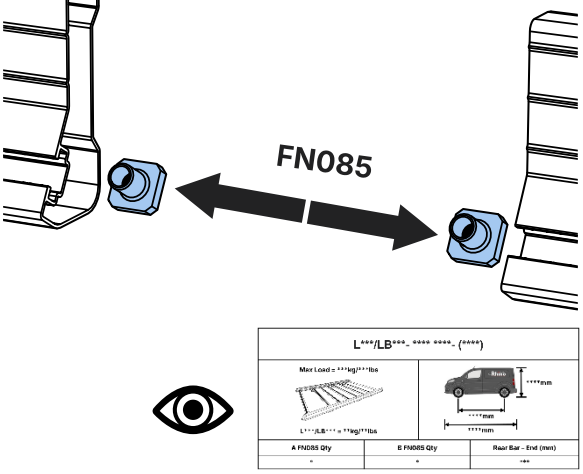

13.

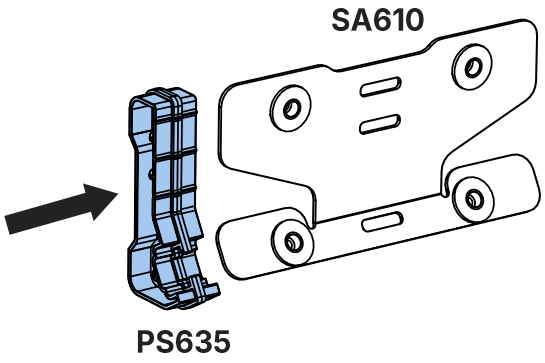

14.

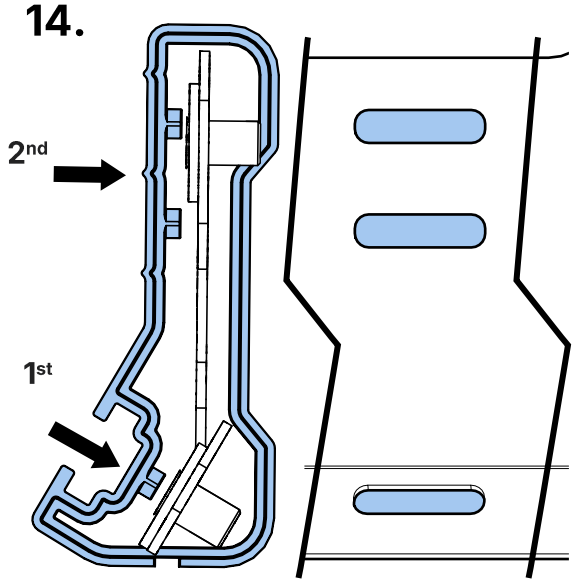

15.

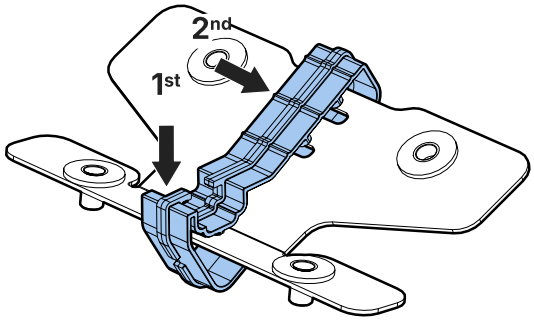

CLICK!

16.

X4

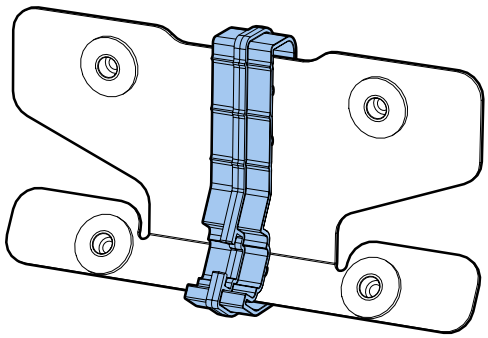

17.

LSF (M)

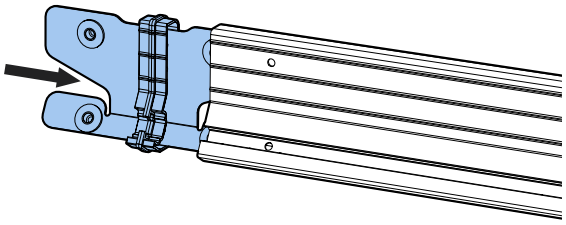

18.

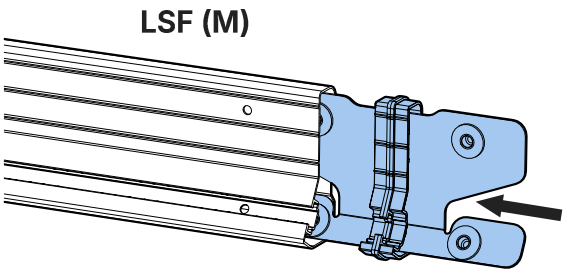

19.

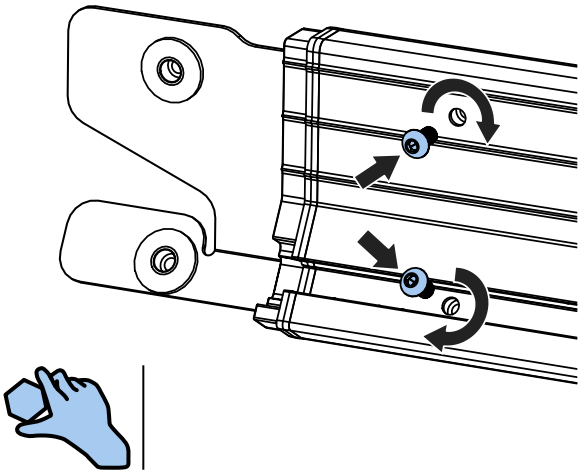

20.

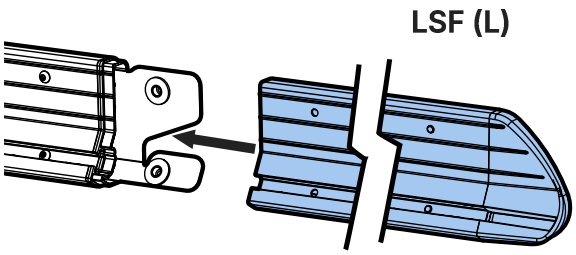

21.

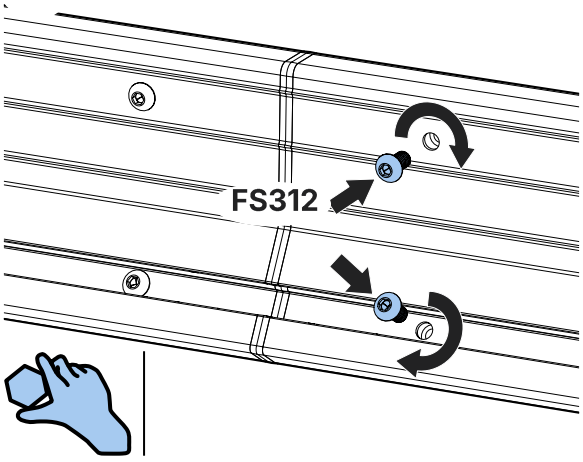

23.

22.

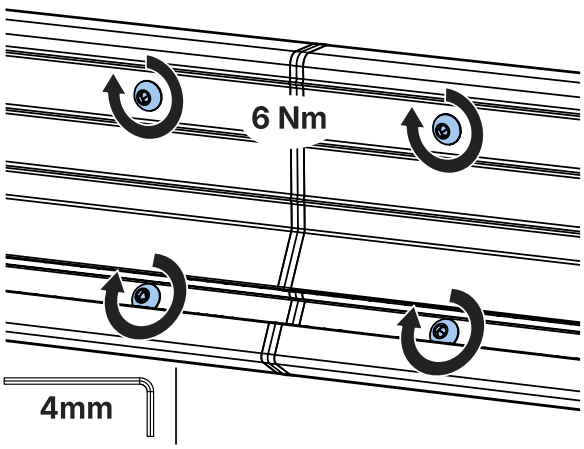

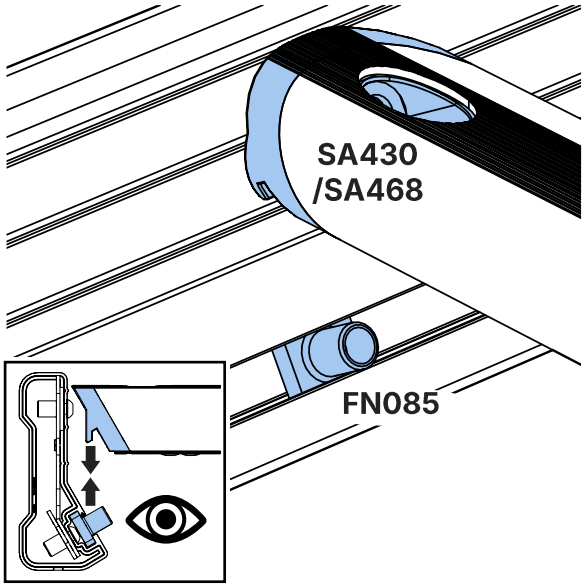

24.

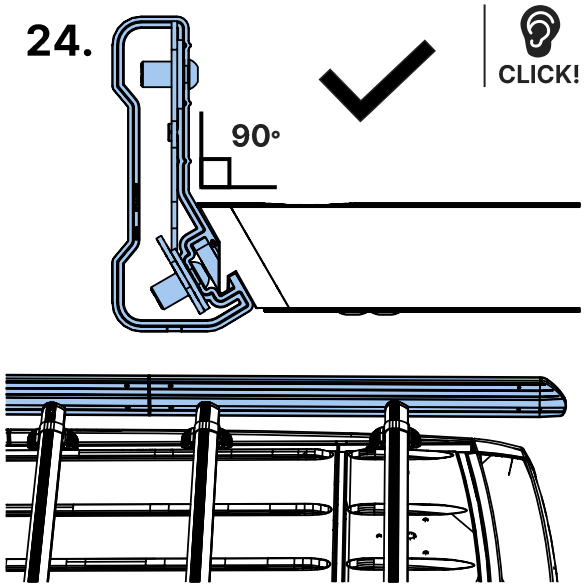

25.

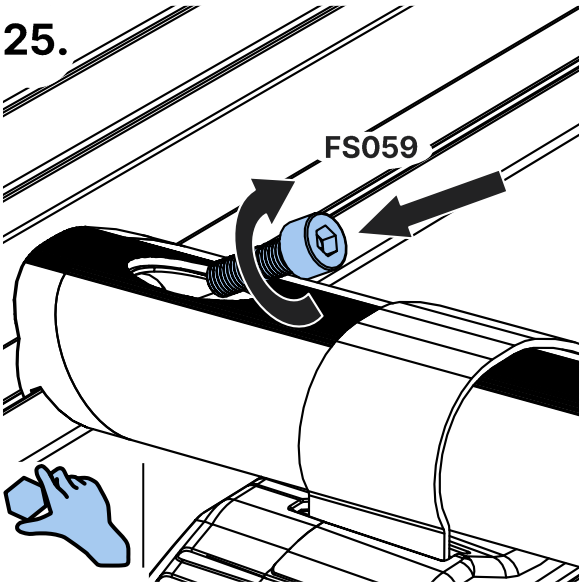

26.

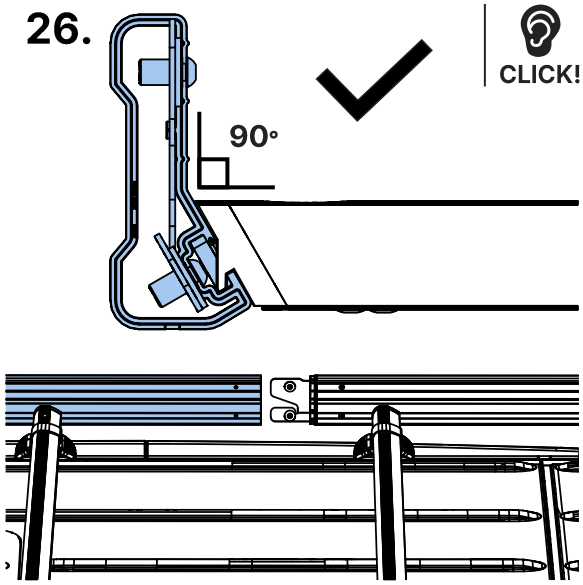

27.

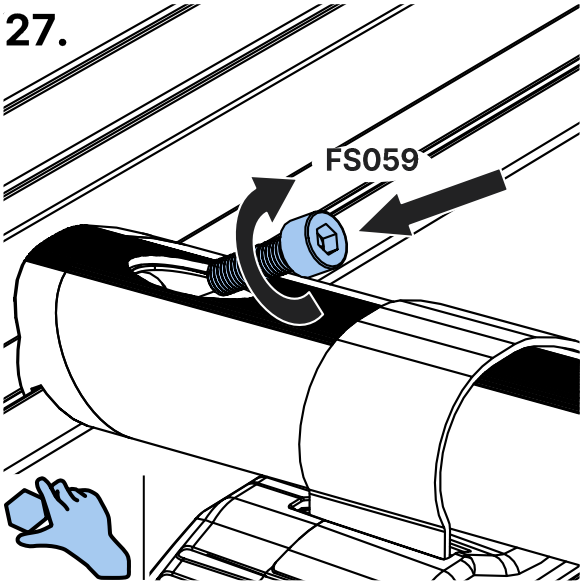

28.

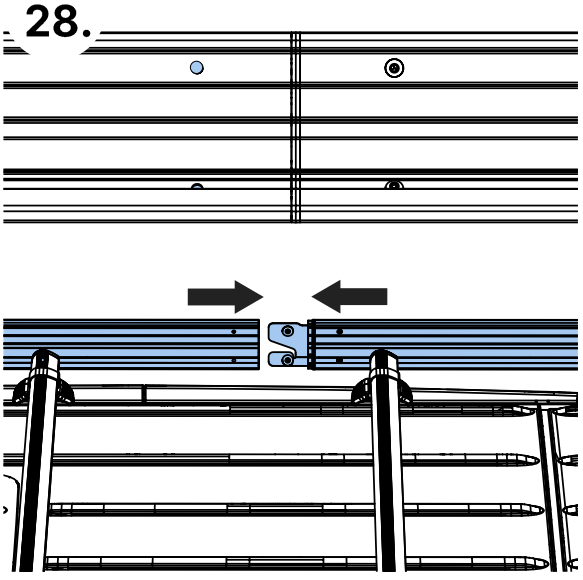

29.

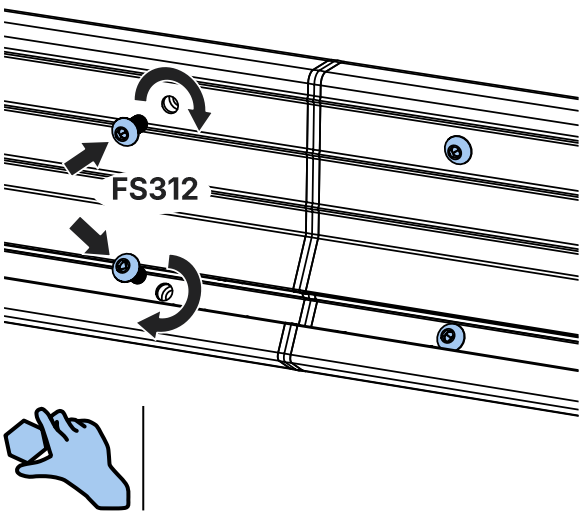

30.

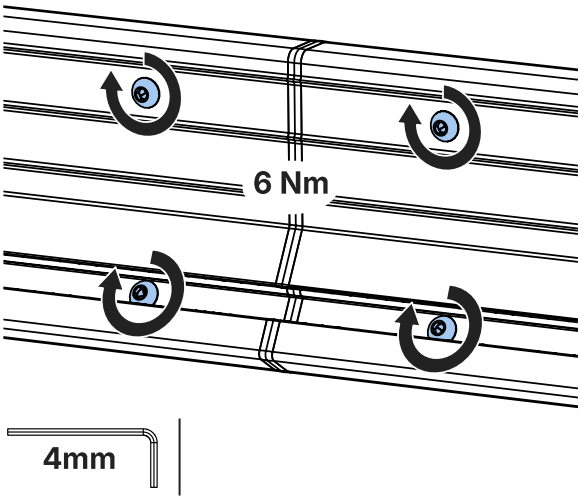

31.

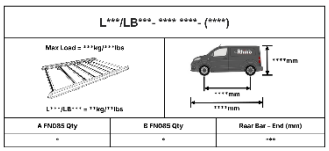

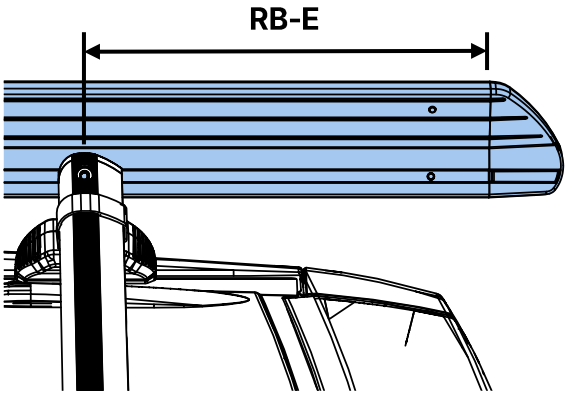

32.

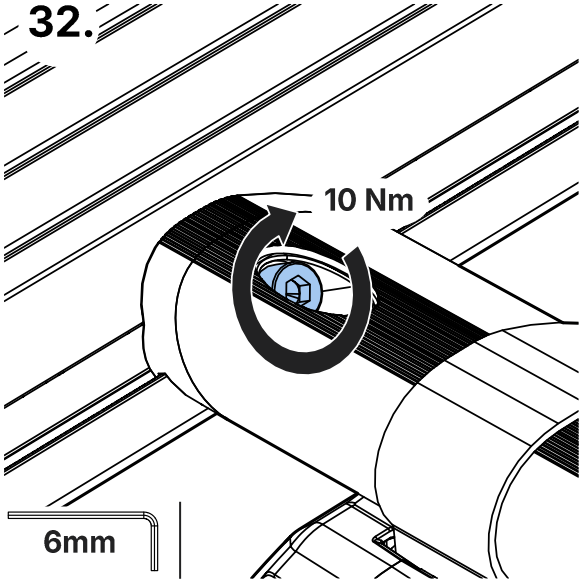

33.

17-32.

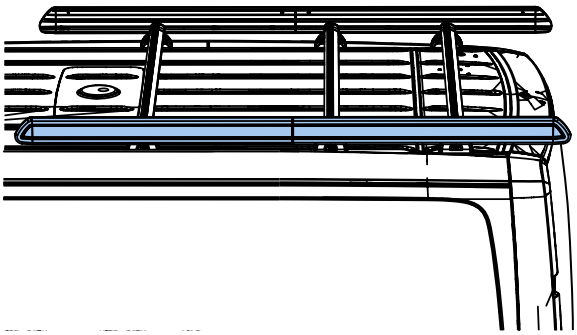

34.

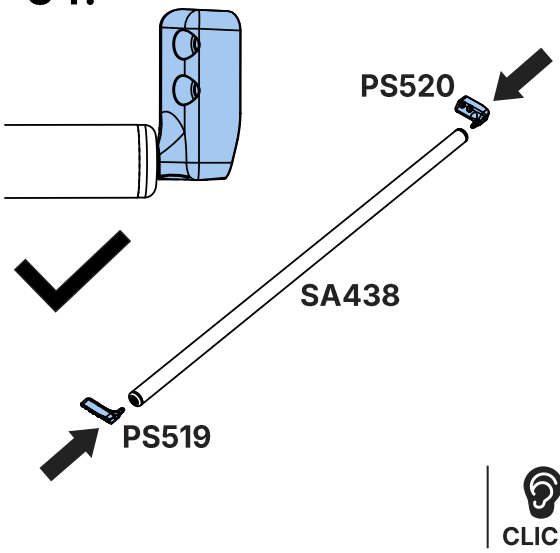

35.

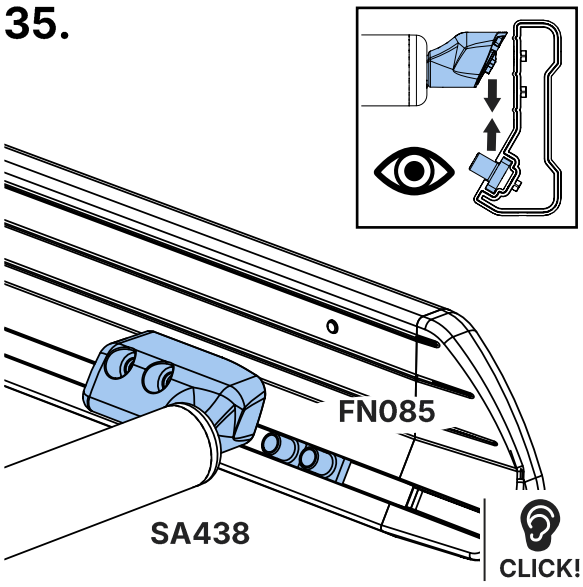

36.

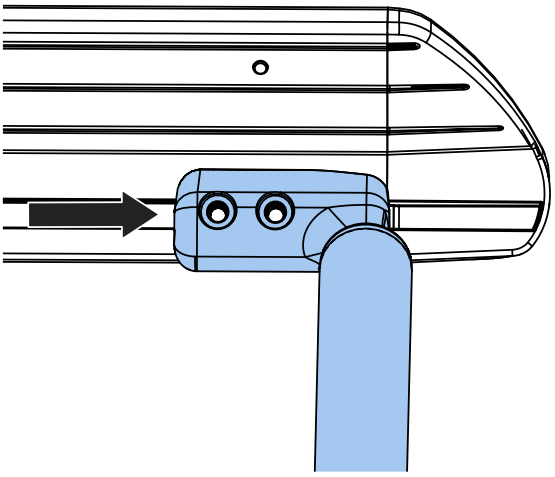

37.

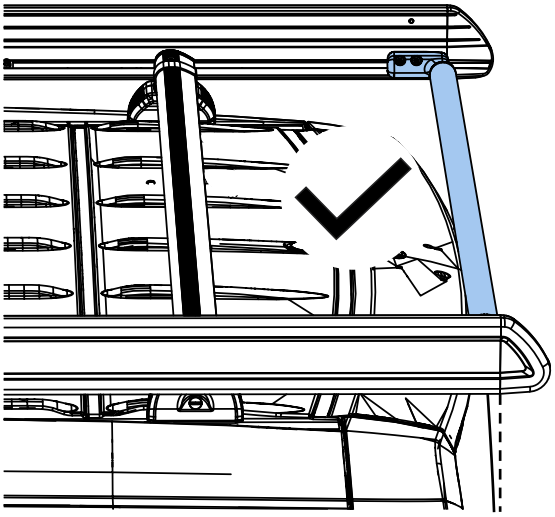

38.

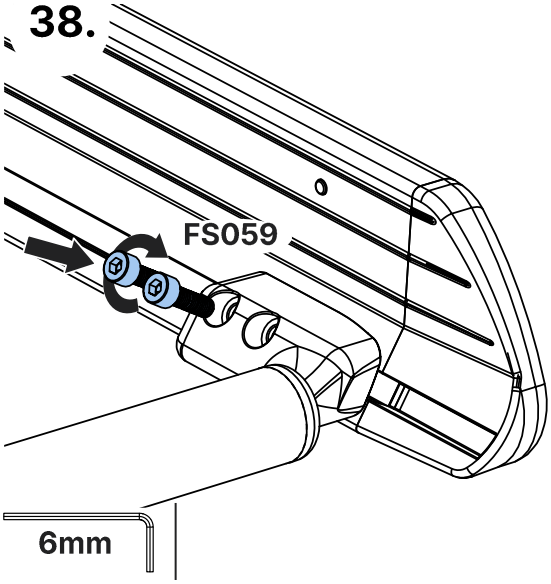

39.

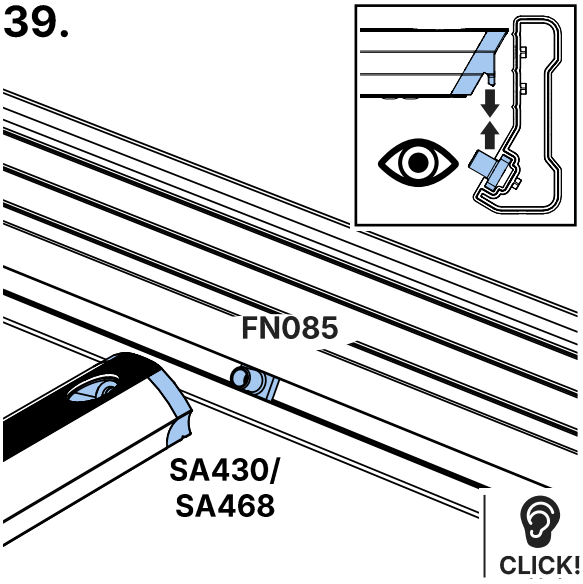

40.

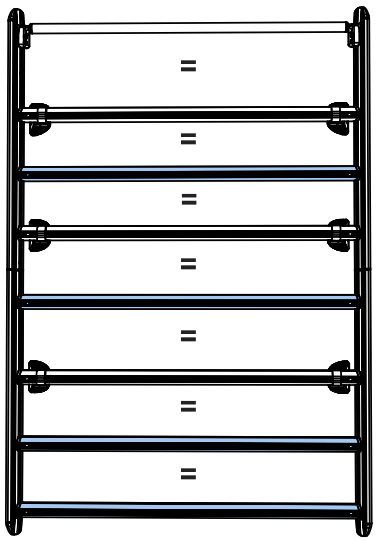

41.

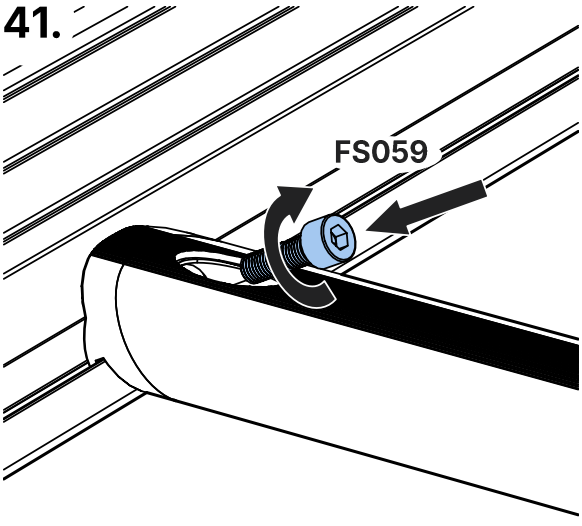

42.

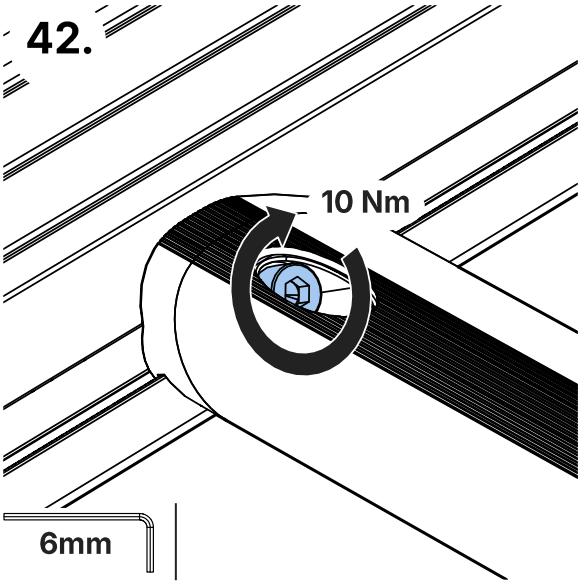

43.

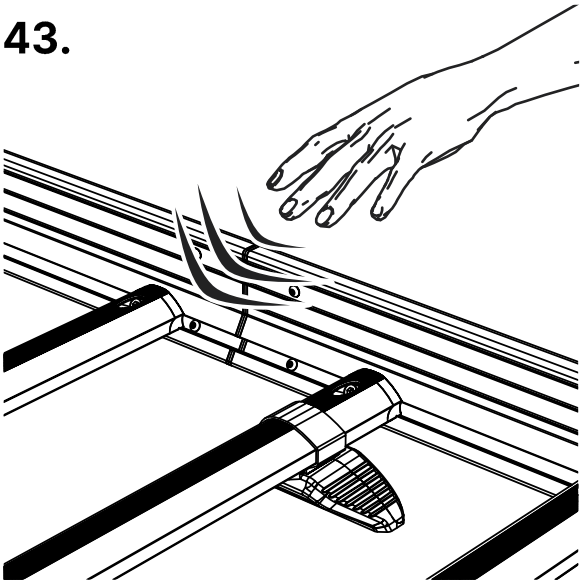

44.

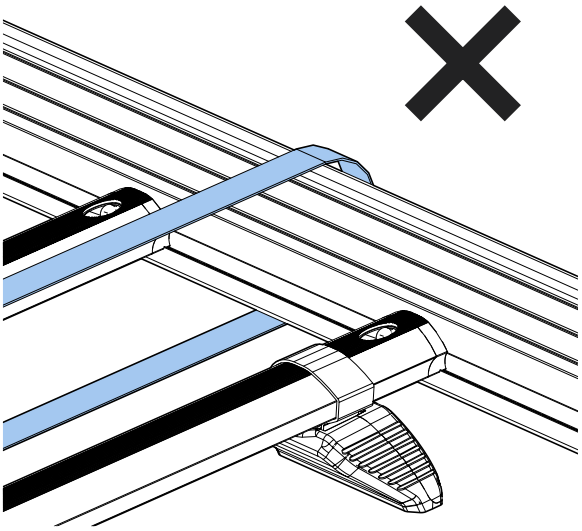

45.

